Supplement to Mathematics Education Key Learning Area Curriculum Guide

Learning Content of Primary Mathematics

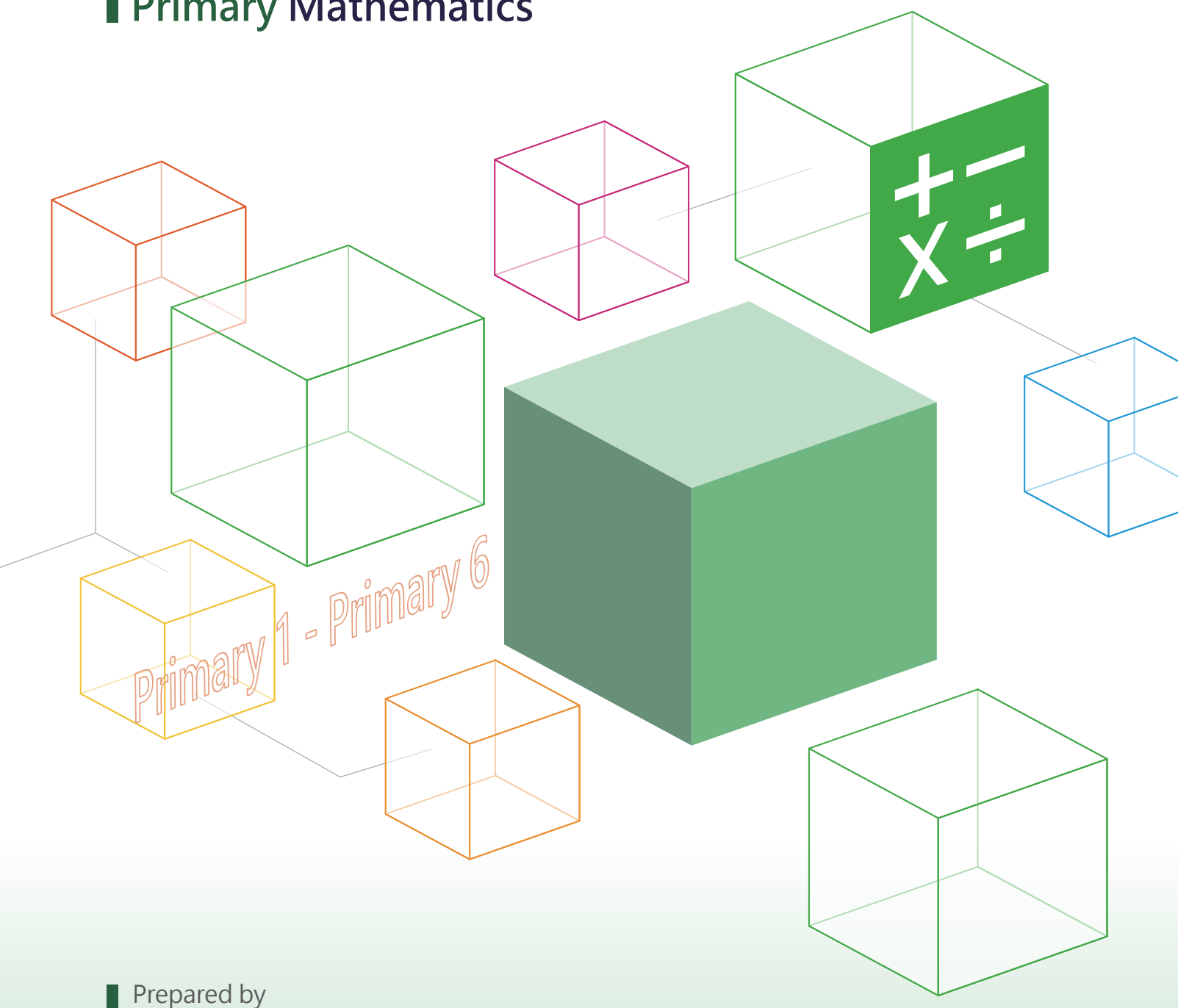

Prepared by
The Curriculum Development Council

Recommended for use in schools by
The Education Bureau
HKSARG
2017 (with updates in Nov 2026)

Contents

		Page
Preamble		ii
Chapter 1	Learning targets	1
Chapter 2	Learning content	6
Chapter 3	Flow chart	111
Membership of the CDC Committee on Mathematics Education		113
Membership of the CDC-HKEAA Committee on Mathematics Education		115
Membership of the Ad-hoc Committee on Primary Mathematics Curriculum		116
Membership of the Ad Hoc Committee for Integrating Mathematical Modelling into Primary Mathematics Curriculum		117

Preamble

In response to the need to keep abreast of the ongoing renewal of the school curriculum and the feedback collected from the New Academic Structure Medium-term Review and Beyond conducted from November 2014 to April 2015, and to strengthen vertical continuity and lateral coherence, the Curriculum Development Council Committee on Mathematics Education set up three Ad Hoc Committees in December 2015 to review and revise the Mathematics curriculum from Primary 1 to Secondary 6. The development of the revised Mathematics curriculum is based on the curriculum aims of Mathematics education, guiding principles of curriculum design, and assessment stipulated in *Mathematics Education Key Learning Area Curriculum Guide (Primary 1 - Secondary 6)* (2017).

This booklet is one of the series *Supplement to Mathematics Education Key Learning Area Curriculum Guide (Primary 1 - Secondary 6)* (2017), aiming at providing a detailed account of:

1. the learning targets of the primary Mathematics curriculum;
2. the learning content of the primary Mathematics curriculum; and
3. the flow chart showing the progression pathways for the learning units of primary Mathematics curriculum.

Comments and suggestions on this booklet are most welcomed. They may be sent to:

Chief Curriculum Development Officer (Mathematics)
Mathematics Education Section
Education Bureau
4/F, Kowloon Government Offices
405 Nathan Road, Kowloon
Fax: 3426 9265
E-mail: ccdoma@edb.gov.hk

Chapter 1 Learning targets

Learning Targets of Primary Mathematics Curriculum (P1 – P3)			
Number Strand	Measures Strand	Shape and Space Strand	Data Handling Strand
Students are expected to:			
• recognise the concepts of whole numbers* and simple fractions; • recognise and use the commutative and associative properties of addition and multiplication; • perform four arithmetic operations of whole numbers and addition and subtraction of simple fractions, and check the reasonableness of results; and • use numbers to formulate and solve simple problems.	• recognise the concepts of length, distance, weight and capacity; • use different ways to compare the length, weight, capacity of objects and distance between objects, and record the results; • understand the need for using standard units of measurements; • choose and use appropriate measuring tools and standard units to compare the length, weight, capacity of objects and distance	• identify intuitively and describe 2-D shapes and 3-D shapes; • recognise the properties of points and lines, and the concept of faces of 3-D shapes; • recognise the concepts of right angles, acute angles and obtuse angles; • recognise the concepts of perpendicular and parallel; • recognise the concepts and properties of squares, rectangles, parallelograms and trapeziums;	• recognise the importance of the organisation and representation of statistical data; • collect and group statistical data according to given criteria; • use appropriate scales to construct simple statistical charts and interpret them; and • formulate and solve simple problems arising from statistical data or statistical charts.

* In the primary Mathematics curriculum, “whole numbers” refers to non-negative integers.

Learning Targets of Primary Mathematics Curriculum (P1 – P3)			
Number Strand	Measures Strand	Shape and Space Strand	Data Handling Strand
Students are expected to:			
	between objects, and record the results; • estimate the result of measurements; • recognise money, time and date, and their use in daily life; and • integrate the knowledge in the strands of Number, Measures, Shape and Space to solve simple problems.	• recognise the inclusion relations between parallelograms and squares, parallelograms and rectangles; • recognise the inclusion relations between different types of triangles; • make 2-D shapes and appreciate the beauty of geometric shapes; and • describe the relative position of different objects and recognise the four directions.	

Learning Targets of Primary Mathematics Curriculum (P4 – P6)				
Number Strand	Algebra Strand	Measures Strand	Shape and Space Strand	Data Handling Strand
Students are expected to:				
• recognise and use the distributive property of multiplication; • recognise the concepts of prime numbers and composite numbers; • understand the concepts of the highest common factors and the least common multiples; • understand the concepts of whole numbers, fractions, decimals, percentages and the relations among them;	• use symbols to represent numbers; • use algebraic expressions to represent the operations of and relations between quantities that are described in words and involve unknown quantities; and • use algebra to formulate and solve simple problems and recognise how to check the reasonableness of results.	• recognise the concepts of perimeter, area, volume and speed; • use different ways to compare the perimeter and area of 2-D shapes, volume and speed of objects, and record the results; • choose appropriate standard units to measure and compare the perimeter and area of 2-D shapes, volume and speed of objects, and record the results;	• recognise the concepts and properties of rhombuses and circles; • recognise the inclusion relations between different types of quadrilaterals; • recognise the concept of vertices and edges of 3-D shapes; • recognise the concept and property of sphere; • make 2-D shapes and 3-D shapes from given information	• understand the criteria for organising and representing statistical data; • use approximate values and appropriate scales to construct statistical charts and interpret them; • recognise relations of data and patterns on the changes of data from statistical charts; • recognise the concept of average and solve problems;

Learning Targets of Primary Mathematics Curriculum (P4 – P6)				
Number Strand	Algebra Strand	Measures Strand	Shape and Space Strand	Data Handling Strand
Students are expected to:				
• perform four arithmetic operations of whole numbers, fractions and decimals, and check the reasonableness of results; and • use numbers to formulate and solve problems.		• use the measuring tool and the standard unit to measure, compare and draw angles of different sizes; • recognise the degree of accuracy of measurements; • estimate the result of measurements; • inquire and use measurements formulae of 2-D shapes and 3-D shapes; • recognise the relation between volume and capacity and solve problems;	and appreciate the beauty of geometric shapes; and • recognise the eight compass points.	• formulate and solve problems arising from statistical data or statistical charts; • choose appropriate statistical charts to represent given data; and • judge the appropriateness of the representation of statistical charts.

Learning Targets of Primary Mathematics Curriculum (P4 – P6)				
Number Strand	Algebra Strand	Measures Strand	Shape and Space Strand	Data Handling Strand
Students are expected to:				
		• perform the interconversion between units of time and solve problems related to time and speed；and • integrate the knowledge in the strands of Number, Measures, Shape and Space to formulate and solve problems.		

Chapter 2 Learning content

Learning Content of Primary Mathematics Curriculum

Notes:

1. *Learning units are grouped under five strands ("Number", "Algebra", "Measures", "Shape and Space" and "Data Handling"), Further Learning Units and Enrichment Topics.*
2. *Related learning objectives are grouped under the same learning unit.*
3. *The notes in the "Remarks" column of the table may be considered as supplementary information about the learning objectives.*
4. *To aid teachers in judging how far to take a given topic, a suggested lesson time in hours is given against each learning unit. However, the lesson time assigned is for their reference only. Teachers may adjust the lesson time to meet their individual needs.*
5. *The total lesson time for primary Mathematic curriculum at both Key Stage One and Key Stage Two are 285 – 356 hours (i.e. 12% – 15% of the total lesson time available for the primary curriculum at that Key Stage).*

Learning Unit	Learning Objective	Time	Remarks
Primary 1			
Number Strand			
1N1 Numbers to 20	1. recognise numbers 1-20 2. perform counting onwards and counting backwards	13.5	Students are required to count, read and write the numbers.

Learning Unit	Learning Objective	Time	Remarks
	3. recognise the concepts of ordinal numbers and cardinal numbers		Students are **not** required to use the terms "ordinal numbers" and "cardinal numbers". Students may use the method of one-to-one correspondence or the concept of cardinal numbers to compare the quantity of two groups of objects. The symbols ">" and "<" are introduced in Learning Unit 2N1.
	4. recognise the odd and even numbers up to 20		
	5. recognise the decomposition and composition of numbers 2-18		Teachers should arrange hands-on activities for students to decompose a number into two 1-digit numbers and compose a number from two 1-digit numbers, for example, 12 is decomposed into 4 and 8; 12 is composed of 4 and 8. Students are required to present the result of decomposition and composition of a number

Learning Unit	Learning Objective	Time	Remarks
			verbally and also by using text and symbols, for example: • "12 equals 4 plus 8" ; "12 minus 8 equals 4" • "12 = 4 + 8"; "12 – 8 = 4" Note: The symbols "+", "–" and "=" here are not used for calculation purposes.
1N2 Basic addition and subtraction	1. understand the basic concepts of addition and subtraction 2. perform addition and subtraction of numbers within 18 verbally	13.5	Students are required to verbally solve the problems presented mainly by diagrams and record their workings in horizontal form. The column forms of addition and subtraction are dealt with in Learning Unit 1N4.

Learning Unit	Learning Objective	Time	Remarks
	3. recognise the concept of 0		Students are required to recognise the concept of 0 through subtraction and the properties of 0, such as "0 + 4 = 4", "4 + 0 = 4" and "4 – 0 = 4". The term "whole number" is introduced in Learning Unit 4N2.
	4. understand the relation between addition and subtraction		Teachers may arrange exploring activities for students to discover the relation between addition and subtraction.
	5. recognise the commutative property of addition		Teachers may provide students with concrete examples to enable them to discover that the commutative property holds for addition but not for subtraction. Students are **not** required to use the term "commutative property".

Learning Unit	Learning Objective	Time	Remarks
1N3 Numbers to 100	1. recognise numbers 21-100	6	Students are required to: ● count, read and write the numbers ● perform counting onwards and counting backwards ● recognise the odd and even numbers up to 100
	2. recognise the concepts of the units place and the tens place		Students are required to recognise the meaning of the numerals in the units place and the tens place. For example, in the numeral "24", "2" is in the tens place and stands for 20, and "4" is in the units place and stands for 4.
	3. compare the magnitude of numbers		The symbols ">" and "<" are introduced in Learning Unit 2N1.
	4. perform counting in groups of 2, 5 and 10		Calculation is **not** required.

Learning Unit	Learning Objective	Time	Remarks
	5. estimate the quantity of objects		The quantity to be estimated should be less than 100.
1N4 Addition and subtraction (I)	1. perform addition of two numbers	13	The numbers are with at most two digits. Addition with carry is required.
	2. perform addition of three numbers		The numbers are with at most two digits. Students are required to recognise that the conventional order of operations goes from left to right, such as $10 + 6 + 2 = 16 + 2 = 18$
	3. recognise the associative property of addition		Teachers may provide students with concrete examples to enable them to discover the associative property of addition. Students are **not** required to use the term "associative property".

Learning Unit	Learning Objective	Time	Remarks
	4. perform subtraction of two numbers		The numbers are with at most two digits. Subtraction with borrowing is **not** required. Students are required to recognise how to use addition to verify the answers.
	5. recognise the column form of addition and subtraction		
	6. solve simple problems		Problems involving addition of three numbers are tackled in Learning Unit 2N2. Students are **not** required to explain their calculation with statements. Note: The results of the addition must be less than 100.
Measures Strand			

Learning Unit	Learning Objective	Time	Remarks
1M1 Length and distance (I)	1. recognise the concepts of length and distance 2. compare intuitively the lengths of objects and compare intuitively the distances between objects 3. compare directly the lengths of objects and compare directly the distances between objects 4. compare the lengths of objects and compare the distances between objects in improvised units	3.5	Students are required to choose appropriate improvised units for taking measurements.
1M2 Money (I)	1. recognise the coins in circulation in Hong Kong 2. recognise the notation of marked prices from price tags	6	Students are only required to read marked prices not more than 10 dollars. Students should read the marked price such as “$2.50” as “two dollars and fifty cents”. Teachers should write the marked prices in the form such as “$3.00”.

Learning Unit	Learning Objective	Time	Remarks
	3. recognise the use of coins in daily life		Students are required to count a group of coins with a total not more than 10 dollars, but **not** required to write numerical expressions to show the workings. Students are only required to do following exchange: ● the exchange involving only 10-cent, 20-cent, 50-cent and 1-dollar coins ● the exchange involving only 1-dollar, 2-dollar, 5-dollar and 10-dollar coins Problems on giving change are tackled in Learning Unit 2N5.
1M3 Length and distance (II)	1. recognise centimetre (cm) 2. measure and compare the lengths of objects, and measure and compare the distances between objects in centimetre	4	Students are required to choose appropriate tools for taking measurements.

Learning Unit	Learning Objective	Time	Remarks
	3. estimate the result of measurements with **ever-ready rulers**		Students are required to recognise how to estimate the result of measurements after they have acquired the experience of measurements.
1M4 Time (I)	1. tell time to the hour and half hour 2. recognise hour (h) 3. measure and compare the time intervals in hour 4. solve simple problems related to time intervals	6	Students are only required to tell time from analog clocks using "…o'clock" and "half past…". Drawing hour hands and minute hands to indicate time is **not** required. Students are required to: ● find the finishing time from the starting time and time interval ● find the time interval from the starting

Learning Unit	Learning Objective	Time	Remarks
			time and finishing time
	5. recognise that there are seven days in a week and the names of the days of the week		Whether Monday or Sunday is the first day of the week need **not** to be stressed.
	6. recognise that there are 12 months in a year and the names of the months		
	7. recognise calendars		Students are required to get information on dates and the days of the week from a calendar. Note: Each time interval must be whole number, and is not more than 12 hours.
Shape and Space Strand			
1S1 3-D shapes (I)	1. recognise the intuitive concepts of prisms, cylinders, pyramids, cones and spheres	6	Identifying intuitively these 3-D shapes from their 2-D representations is required. Teachers should provide opportunities for students to touch, stack up and roll the real

Learning Unit	Learning Objective	Time	Remarks
			objects or models of these 3-D shapes. Teachers should avoid using oblique 3-D shapes such as oblique prisms and oblique cones as examples. The names of different prisms and pyramids are introduced in Learning Unit 2S1.
1S2 2-D shapes	1. recognise the intuitive concepts of points, straight lines and curves	10	Students are required to identify intuitively straight lines and curves. The following concepts are required: ● in mathematics, a point has no size and a line has no breadth ● there is only a straight line passing through two fixed points; however, there are many curves passing through these two points Teachers may arrange hands-on activities to consolidate students' conception of straight

Learning Unit	Learning Objective	Time	Remarks
			lines and curves. The concept of line segment is dealt with in Learning Unit 2S4.
	2. draw and make straight lines and curves		Teachers may let students use different methods to draw and make straight lines and curves.
	3. recognise the basic concepts of triangles, quadrilaterals, pentagons, hexagons and circles		
	4. draw and make triangles, quadrilaterals, pentagons, hexagons and circles		Teachers may let students use different methods to draw and make these 2-D shapes.
	5. form 2-D shapes by triangles, quadrilaterals, pentagons, hexagons and circles		Teachers may let students form 2-D shapes freely or according to designated 2-D shapes, and let them appreciate the beauty of geometric shapes. Students are **not** required to use the term "geometric shape".

Learning Unit	Learning Objective	Time	Remarks
1S3 Directions and positions (I)	1. use “over”, “under”, “left”, “right”, “in front of”, “behind” and “between” to describe relative positions of objects with respect to the observer’s point of view	3.5	Students are set as observers.
Further Learning Unit			
1F1 Inquiry and investigation	Through various learning activities, discover and construct knowledge, further improve the ability to inquire, communicate, reason and conceptualise mathematical concepts	10	This is **not** an independent and isolated learning unit. The time is allocated for students to engage in learning activities from different learning units, for example, activities on enrichment topics, cross-learning unit activities, and cross-KLA activities that based on mathematical topics.
Enrichment Topics			
1E1 Simple Sudoku game	1. perform Sudoku game 2. design Sudoku game	-	

Learning Unit	Learning Objective	Time	Remarks
1E2 Sorting methods	1. explore how to determine criteria of sorting	-	Students are required to formulate the criteria of sorting satisfying given conditions, such as satisfying the designated number of groups. The criteria of sorting can be related to attributes such as shapes, colours, or patterns on the items.

Learning Unit	Learning Objective	Time	Remarks
Primary 2			
Number Strand			
2N1 3-digit numbers	1. recognise 3-digit numbers	3.5	Students are required to: ● count, read and write numbers ● perform counting onwards and counting backwards ● recognise 3-digit odd and even numbers
	2. recognise the concept of the hundreds place		Students are required to recognise the meaning of the numeral in the hundreds place.
	3. compare the magnitude of numbers		Students are required to use the symbols "=", ">"and "<" to express the relation between the magnitude of two numbers.
	4. perform counting in groups of 20, 25, 50 and 100		Calculation is **not** required.

Learning Unit	Learning Objective	Time	Remarks
	5. estimate the quantity of objects		The quantity to be estimated should be less than 1000.
2N2 Addition and subtraction (II)	1. perform addition of not more than three numbers 2. perform addition by using the commutative and associative properties of addition	7	The numbers are with at most three digits. Addition with carry is required. The numbers are with at most three digits. Teachers may use examples to enable students to understand that using these properties of addition can sometimes speed up the operations, such as: $1 + 65 + 399$ $= 65 + 1 + 399$ $= 65 + 400$ $= 465$ Students are **not** required to use the terms "commutative property" and "associative

Learning Unit	Learning Objective	Time	Remarks
			property”.
	3. perform subtraction of not more than three numbers		The numbers are with at most two digits. Subtraction with borrowing is required. Students are required to recognise the conventional order of operations goes from left to right, such as $10 - 7 - 2 = 3 - 2 = 1$ Teachers may provide students with concrete examples to enable them to discover that the associative property does not hold for subtraction. Students are **not** required to use the term “associative property”.
	4. solve problems		Students are required to explain their calculation with statements.

Learning Unit	Learning Objective	Time	Remarks
			Problems involving both "…more (less/fewer) than…" and "altogether" are tackled in Learning Unit 3N4, for example: Andy has 10 sweets and he has 2 fewer sweets than Betty does. How many sweets do they have altogether? Note: (i) The results of the addition must be less than 1000. (ii) Students are required to recognise how to estimate the result of calculations.
2N3 Basic multiplication	1. recognise the basic concept of multiplication 2. understand the multiplication table (0-10) 3. perform basic multiplication	11.5	

Learning Unit	Learning Objective	Time	Remarks
	4. recognise the commutative property of multiplication		Teachers may provide students with concrete examples to enable them to discover the commutative property of multiplication. Students are **not** required to use the term "commutative property".
	5. solve problems		Students may use "3 × 2" or "2 × 3" to represent two threes, for example, in solving the following problem: Each box has 3 pieces of cake, how many pieces of cake are there in 2 boxes? The expression can be "3 × 2" or "2 × 3".
2N4 4-digit numbers	1. recognise 4-digit numbers	2.5	Students are required to: ● count, read and write numbers ● perform counting onwards and counting backwards

Learning Unit	Learning Objective	Time	Remarks
	2. recognise the concept of the thousands place 3. perform counting in groups of 200, 250, 500 and 1000 4. compare the magnitude of numbers		• recognise 4-digit odd and even numbers Students are required to recognise the meaning of the numeral in the thousands place. Calculation is **not** required. Note: This Learning Unit should be taught prior to the Learning Unit 2M3 "Money (II)".
2N5 Addition and subtraction (III)	1. perform subtraction of two numbers 2. perform mixed operations of addition and subtraction of three numbers	8.5	The numbers are with at most three digits. Subtraction with borrowing is required. Addition and subtraction of numbers with more than three digits are **not** required.

Learning Unit	Learning Objective	Time	Remarks
	3. solve problems		Students are required to recognise that the conventional order of operations goes from left to right, such as $7 - 2 + 3 = 5 + 3 = 8$ Problems related to money are required, but the calculations involving decimals are **not** required. Problems involving both "…more (less/fewer) than…" and "altogether" are tackled in Learning Unit 3N4, for example: Andy has 10 sweets and he has 2 more sweets than Betty does. How many sweets do they have altogether? Note: (i) Students are required to recognise how to estimate the result of calculations.

Learning Unit	Learning Objective	Time	Remarks
			(ii) This Learning Unit should be taught subsequently to the Learning Unit 2M3 "Money (II)".
2N6 Basic division	1. recognise the basic concept of division 2. perform basic division 3. recognise the relation between multiplication and division 4. solve problems	11.5	The concept of remainder is required. Teachers may provide students with concrete examples to enable them to discover that the commutative property does not hold for division. Students are **not** required to use the term "commutative property". Teachers may provide students with concrete examples to enable them to discover the relation between multiplication and division.

Learning Unit	Learning Objective	Time	Remarks
Measures Strand			
2M1 Length and distance (III)	1. recognise metre (m) 2. measure and compare the lengths of objects, and measure and compare the distances between objects in metre 3. record the lengths of objects and the distances between objects in appropriate measuring units 4. estimate the result of measurements with **ever-ready rulers**	5	Students are required to choose appropriate tools for taking measurements. Students may use ways such as 110 cm and 1 m 10 cm for recording lengths and distances, and convert 1 m 10 cm to 110 cm. Recording lengths and distances using decimals are dealt with in Learning Unit 4N7. Students are required to recognise how to estimate the result of measurements after they have acquired the experience of measurements.

Learning Unit	Learning Objective	Time	Remarks
2M2 Time (II)	1. tell time to the nearest minute 2. recognise minute (min) 3. measure and compare the time intervals in minutes 4. solve simple problems related to time intervals 5. recognise that there are 24 hours in a day 6. recognise the concepts of morning (a.m.) and	5.5	Students are required to tell time from analog clocks and digital clocks. Drawing hour hands and minute hands to indicate time is **not** required. Students are required to: • find the finishing time from the starting time and time interval • find the time interval from the starting time and finishing time

Learning Unit	Learning Objective	Time	Remarks
	afternoon (p.m.) 7. tell time using “morning”, “afternoon”, “noon” and “midnight” 8. recognise the number of days in each month 9. recognise the numbers of days in a common year and a leap year 10. solve problems related to the numbers of days spent on events		 Teachers may let students recognise that the time of noon and midnight can be written as “12:00 noon” and “12:00 midnight” respectively. Given any two of the starting date, finishing date and number of days spent on an event, students are required to find the unknown quantity/date by reading the calendar. Note: Each time interval is not more than 60 minutes.

Learning Unit	Learning Objective	Time	Remarks
2M3 Money (II)	1. recognise the notes in circulation in Hong Kong	5	Students should recognise the patterns of notes in circulation, for example, recognising the notes with same denominations but issued by different note-issuing organisations.
	2. recognise the notation of marked prices of greater amounts from price tags		Students are required to read marked prices not more than 1000 dollars. Students should read the marked price such as "$23.50" as "twenty-three dollars and fifty cents". Teachers should write the marked prices in the form such as "$23.00".
	3. recognise the use of money in daily life		Students are required to count a group of notes and coins with a total not more than 1000 dollars, but **not** required to write numerical expressions to show the workings. Students are only required to do following

Learning Unit	Learning Objective	Time	Remarks
			exchange: • the exchange involving only 10-dollar, 20-dollar, 50-dollar and 100-dollar notes • the exchange involving only 100-dollar, 500-dollar and 1000-dollar notes Problems on giving change are tackled in Learning Unit 2N5. Problems of decimal operations involving money is tackled in Learning Units 4N8, 5N4 and 6N1. Note: This Learning Unit should be taught subsequent to the Learning Unit 2N4 "4-digit numbers" and prior to 2N5 "Addition and subtraction (III)".
Shape and Space Strand			

Learning Unit	Learning Objective	Time	Remarks
2S1 3-D shapes (II)	1. recognise the concept of faces of a 3-D shape 2. recognise the names of different prisms and pyramids	3	The concepts include the bases and lateral faces of a prism and a pyramid, the bases and curved surface of a cylinder and a cone, and the curved surface of a sphere. Students are required to recognise the names of different prisms and pyramids, such as "quadrilateral prism" and "pentagonal pyramid". The terms "cubes" and "cuboids" are introduced in Learning Unit 5S2.
2S2 Angles	1. recognise the concept of angles 2. compare the sizes of angles 3. recognise the concepts of right angles and perpendicular lines	7	The unit "degree" is introduced in Learning Unit 6M1.

Learning Unit	Learning Objective	Time	Remarks
	4. draw and make perpendicular lines		Drawing under the following conditions is required: ● through a given point on a straight line, draw a straight line perpendicular to the given straight line ● through a given point not on the straight line, draw a straight line perpendicular to the given straight line Students are required to recognise the concept of distance from a point to a straight line. Teachers may let students use different tools, such as rulers and set squares to draw perpendicular lines.
	5. recognise the concepts of acute angles and obtuse angles		The concepts of straight angles, round angles and reflex angles, and the unit "degree" are dealt with in Learning Unit 6M1.

Learning Unit	Learning Objective	Time	Remarks
	6. draw and make angles of different sizes		Teachers may let students use different methods to draw and make angles of different sizes.
2S3 Directions and positions (II)	1. recognise the four main directions: east, south, west and north 2. use a compass to measure directions	2.5	Students are required to recognise the short forms “E”, “S”, “W” and “N”.
2S4 Quadrilaterals (I)	1. recognise the concept of line segments	9	Students are required to recognise that amongst the line segment and all curves joining two given end points, the line segment has the shortest length. Students are **not** required to use the term “end point”.
	2. recognise the concept of quadrilaterals		The concepts of opposite sides and adjacent sides are required.
	3. recognise the concepts and basic properties of		The basic properties of squares include:

Learning Unit	Learning Objective	Time	Remarks
	squares and rectangles		• the four angles are right angles • the four sides are equal in length The basic properties of rectangles include: • the four angles are right angles • the opposite sides are equal in length In this Learning Unit, teachers should avoid using squares as examples to describe the properties of rectangles. The inclusion relation between squares and rectangles is dealt with in Learning Unit 4S1.
	4. draw and make squares and rectangles		Teachers may let students use different methods to draw and make squares and rectangles.
Data Handling Strand			
2D1 Pictograms	1. recognise pictograms	3.5	Teachers should let students recognise the importance of the organisation and

Learning Unit	Learning Objective	Time	Remarks
	2. interpret pictograms 3. construct pictograms		representation of data through concrete examples. Pictograms in horizontal and vertical forms are required. Note: Only the pictograms using the one-to-one representation are required.
Further Learning Unit			
2F1 Inquiry and investigation	Through various learning activities, discover and construct knowledge, further improve the ability to inquire, communicate, reason and conceptualise mathematical concepts	10	This is **not** an independent and isolated learning unit. The time is allocated for students to engage in learning activities from different learning units, for example, activities on enrichment topics, cross-learning unit activities, and cross-KLA activities that based on mathematical topics.

Learning Unit	Learning Objective	Time	Remarks
Enrichment Topics			
2E1 Time-recording and timing devices	1. recognise the time-recording and timing devices in modern and ancient times	-	
2E2 Block charts	1. recognise block charts 2. interpret block charts 3. construct block charts	-	

Learning Unit	Learning Objective	Time	Remarks
Primary 3			
Number Strand			
3N1 5-digit numbers	1. recognise 5-digit numbers 2. recognise the concept of the ten thousands place 3. compare the magnitude of numbers	2.5	Students are required to: ● count, read and write numbers ● perform counting onwards and counting backwards ● recognise 5-digit odd and even numbers Students are required to recognise the meaning of the numeral in the ten thousands place.
3N2 Multiplication (I)	1. perform simple multiplication	6	Simple multiplication includes: ● 2-digit number × 1-digit number

Learning Unit	Learning Objective	Time	Remarks
			(1-digit number × 2-digit number) • 3-digit number × 1-digit number (1-digit number × 3-digit number) Students are required to understand the principle of operation of multiplication in column form, for example, to understand why the product of 43 × 2 can be obtained by calculating 40 × 2 + 3 × 2, and why "8" is written under "4".
	2. perform multiplication of three numbers		Teachers may provide students with concrete examples to enable them to discover the associative property of multiplication. Students are **not** required to use the term "associative property".
	3. solve problems		

Learning Unit	Learning Objective	Time	Remarks
			Note: Students are required to recognise how to estimate the result of calculations.
3N3 Division (I)	1. perform simple division	7.5	Simple division includes: • 2-digit number ÷ 1-digit number • 3-digit number ÷ 1-digit number Students are required to understand the principle of operation of division in column form, for example, to understand why the quotient of $68 \div 2$ can be obtained by calculating $60 \div 2 + 8 \div 2$, and why "3" is written above "6". Division involving remainder is required.
	2. perform division of three numbers		Teachers may provide students concrete examples to enable them to discover that the associative property does not hold for division.

Learning Unit	Learning Objective	Time	Remarks
	3. solve problems		Students are **not** required to use the term "associative property". Note: Students are required to recognise how to estimate the result of calculations.
3N4 Four arithmetic operations (I)	1. recognise and use brackets 2. perform mixed operations of addition and subtraction of three numbers 3. perform mixed operations of addition and multiplication of, and subtraction and multiplication of not more than four numbers 4. solve problems	13.5	Addition and subtraction of numbers with more than four digits are **not** required. Teachers may provide concrete examples to let students recognise the following relations:

Learning Unit	Learning Objective	Time	Remarks
			• $a \times (b + c) = a \times b + a \times c$ • $(a + b) \times c = a \times c + b \times c$ • $a \times (b - c) = a \times b - a \times c$ • $(a - b) \times c = a \times c - b \times c$ where *a, b* and *c* are whole numbers. The term "distributive property of multiplication" needs **not** be introduced and the application of the above relations is dealt with in Learning Unit 4N5. Problems involving both "…more (less/fewer) than…" and "altogether" is required, for example: • Andy has 10 sweets and he has 2 fewer sweets than Betty does. How many sweets

Learning Unit	Learning Objective	Time	Remarks
			do they have altogether? • Andy has 10 sweets and he has 2 more sweets than Betty does. How many sweets do they have altogether? Note: (i) Mixed operations may involve more than one bracket. But operations involving multiple levels of brackets, such as $(4 - (2 - 1)) \times 3$, are **not** required. (ii) Students are required to recognise how to estimate the result of calculations.
3N5 Fractions (I)	1. recognise the concept of fractions	9.5	The concept of fractions includes: • fractions as parts of a whole object (one whole)

Learning Unit	Learning Objective	Time	Remarks
	2. recognise the concept of equivalent fractions 3. compare the magnitude of fractions with the same denominator or numerator 4. perform addition and subtraction of at most three fractions with the same denominator		• fractions as parts of a set of objects (one whole) Students may learn the concept of equivalent fractions through the use of concrete objects or diagram representations. The concepts of expanding and reducing of fractions are dealt with in Learning Unit 4N6. The results must not be greater than 1. Students are required to solve problems presented mainly by diagrams.
Measures Strand			
3M1 Length and distance (IV)	1. recognise kilometre (km) 2. compare the lengths of objects and compare the	6	

Learning Unit	Learning Objective	Time	Remarks
	distances between objects in kilometre 3. recognise millimetre (mm) 4. measure and compare the lengths of objects, and measure and compare the distances between objects in millimetre 5. record the lengths of objects and the distances between objects with appropriate measuring units		Students are required to choose appropriate tools for taking measurements. Students are required to recognise how to estimate the result of measurements after they have acquired the experience of measurements. Students may use ways such as 13 mm and 1 cm 3 mm for recording lengths and distances, and convert 1 cm 3 mm to 13 mm. Recording lengths and distances using decimals are dealt with in Learning Unit 4N7.

Learning Unit	Learning Objective	Time	Remarks
3M2 Time (III)	1. recognise second (s) 2. measure and compare the time intervals in seconds 3. solve simple problems related to time intervals	4	 Teachers should encourage students to estimate the time intervals. Given any two of the starting time, finishing time and time interval, students are required to find the unknown quantity/time. The time only involves hour and minute, and each time interval must be a whole number and is not more than 12 hours or 60 minutes respectively.
3M3 Capacity	1. recognise the concept of capacity 2. compare intuitively the capacities of containers 3. compare directly the capacities of containers 4. compare the capacities of containers in improvised units	7	 Students are required to choose appropriate improvised units for taking measurements.

Learning Unit	Learning Objective	Time	Remarks
	5. recognise litre (L) and millilitre (mL)		Students are required to recognise that the symbols of litre and millilitre can be written in small letters.
	6. measure and compare the capacities of containers in litre and millilitre		Students are required to choose appropriate tools for taking measurements. Students are required to recognise how to estimate the result of measurements after they have acquired the experience of measurements.
	7. record the capacity of containers with appropriate measuring units		Students may use ways such as 1030 mL and 1 L 30 mL for recording capacities, and convert 1 L 30 mL to 1030 mL. Recording capacities using decimals are dealt with in Learning Unit 4N7. Note: Teachers may consider using real-life examples or related learning elements in

Learning Unit	Learning Objective	Time	Remarks
			Science Education or Technology Education KLAs to enhance learning and teaching.
3M4 Time (IV)	1. recognise the 24-hour time 2. Tell time in term of the 24-hour time	3	
3M5 Weight	1. recognise the concept of weight 2. compare intuitively the weights of objects 3. compare directly the weights of objects 4. compare the weights of objects in improvised units 5. recognise gram (g) and kilogram (kg) 6. measure and compare the weights of objects in gram	5.5	Students are required to choose appropriate improvised units for taking measurements. Gram and kilogram are units of mass. However, in view of the language habits of the majority in their daily life, it is suggested **not** to mention the term "mass". Students are required to choose appropriate

Learning Unit	Learning Objective	Time	Remarks
	and kilogram		tools for taking measurements. Students are required to recognise how to estimate the result of measurements after they have acquired the experience of measurements.
	7. record the weight of objects in appropriate measuring units		Students may use ways such as 1030 g and 1 kg 30 g for recording weights, and convert 1 kg 30 g to 1030 g. Recording weights using decimals are dealt with in Learning Unit 4N7.
Shape and Space Strand			
3S1 Quadrilaterals (II)	1. recognise the concept of parallel lines	7.5	Students are required to recognise that two parallel lines are equidistant everywhere.
	2. draw and make parallel lines		Teachers may let students use different tools, such as rulers and set squares to draw parallel lines.

Learning Unit	Learning Objective	Time	Remarks
	3. recognise the concept and properties of parallelograms		The properties of parallelograms include: ● opposite sides are parallel ● opposite sides are equal in length
	4. recognise squares and rectangles are parallelograms		
	5. recognise the concept and property of trapeziums		The concepts of the upper base and lower base of a trapezium are required. The property of trapeziums includes: only one pair of opposite sides are parallel (that is, the upper and lower bases are parallel)
	6. draw and make parallelograms and trapeziums		Teachers may let students use different methods to draw and make parallelograms and trapeziums.
3S2 Triangles	1. recognise the concepts of right-angled triangles, isosceles triangles, equilateral triangles, isosceles right-angled triangles and scalene triangles	9	Students are required to recognise that isosceles right-angled triangles can be called as “right-angled isosceles triangles”.

Learning Unit	Learning Objective	Time	Remarks
	2. recognise the relations between different types of triangles		The relations include: ● all isosceles right-angled triangles are right-angled triangles ● all isosceles right-angled triangles are isosceles triangles ● all equilateral triangles are isosceles triangles Teachers may illustrate the inclusion relations between different types of triangles by using such as Venn diagrams or tree diagrams. Students are **not** required to use the term "inclusion relation".
	3. recognise that the sum of any two sides of a triangle is greater than the remaining side		Teachers may arrange hands-on exploratory activities for students to enable them to discover this property.

Learning Unit	Learning Objective	Time	Remarks
	4. draw and make triangles		Teachers may let students use different methods to draw and make triangles. Using the property in Learning Objective 3S2.3 to make triangles is required.
Data Handling Strand			
3D1 Bar charts (I)	1. recognise bar charts 2. interpret bar charts 3. construct bar charts	4	Bar charts in horizontal and vertical forms are required. Students are required to: ● collect data ● construct frequency tables using the symbols "卌" or "正" for recording data ● choose the one-to-one, one-to-two or one-to-five representations according to the magnitude of the data

Learning Unit	Learning Objective	Time	Remarks
			Note: Only the bar charts using the one-to-one, one-to-two and one-to-five representations are required.
Further Learning Unit			
3F1 Inquiry and investigation	Through various learning activities, discover and construct knowledge, further improve the ability to inquire, communicate, reason and conceptualise mathematical concepts	10	This is **not** an independent and isolated learning unit. The time is allocated for students to engage in learning activities from different learning units, for example, activities on enrichment topics, cross-learning unit activities, and cross-KLA activities that based on mathematical topics.
Enrichment Topics			
3E1 Curve stitching	1. recognise and appreciate curve stitching 2. make curve stitching patterns	-	

Learning Unit	Learning Objective	Time	Remarks
3E2 The map-colouring problem	1. explore whether four colours suffice to colour the regions of a map so that any two adjacent regions have different colours	-	

Total lesson time for P1–P3 (Key Stage One)：285 hours

Learning Unit	Learning Objective	Time	Remarks
Primary 4			
Number Strand			
4N1 Multiplication (II)	1. perform multiplication 2. perform multiplication by using the commutative and associative properties of multiplication	6	Multiplication includes: ● 2-digit number × 2-digit number ● 3-digit number × 2-digit number (2-digit number × 3-digit number) Students are required to understand the principle of operation of multiplication in column form. Teachers may use examples to enable students to understand that using these properties of multiplication can sometimes speed up the operation, for example: $25 \times 53 \times 4 = 53 \times (25 \times 4)$ Students are **not** required to use the terms

Learning Unit	Learning Objective	Time	Remarks
			"commutative property" and "associative property".
	3. solve problems		Note: Students are required to recognise how to estimate the result of calculations.
4N2 Division (II)	1. perform division	6	Division includes: ● 2-digit number ÷ 2-digit number ● 3-digit number ÷ 2-digit number Students are required to understand the principle of operation of division in column form.
	2. recognise the concept of divisibility		Students are required to recognise the tests of divisibility of 2, 3, 5 and 10. Students are required to recognise the concepts of odd and even numbers through

Learning Unit	Learning Objective	Time	Remarks
	3. solve problems		the divisibility by 2. The term "whole number" should be introduced. Note: Students are required to recognise how to estimate the result of calculations.
4N3 Multiples and factors	1. understand the concept of multiples 2. understand the concept of factors 3. understand the relation between factors and multiples 4. recognise the concepts of prime numbers and composite numbers	8	Finding all the factors of a nonzero whole number is required. Students are required to determine whether a given number not exceeding 100 is a prime number, and to find all prime numbers up to

Learning Unit	Learning Objective	Time	Remarks
			100 by the sieve of Eratosthenes. Note: Recognising the concepts of the multiples and factors of 0 is not required.
4N4 Common multiples and common factors	1. understand the concepts of common multiples and common factors 2. understand the concepts of the least common multiple and the highest common factor 3. find the least common multiple and the highest common factor of two numbers by listing their multiples and factors 4. find the least common multiple and the highest common factor of two numbers by using short division	7.5	Students are required to find the common multiples and common factors of the two numbers by listing their multiples and factors. Students are required to recognise the short forms “L.C.M.” and “H.C.F.”.

Learning Unit	Learning Objective	Time	Remarks
4N5 Four arithmetic operations (II)	1. recognise the distributive property of multiplication	8	Teachers may provide students with concrete examples to enable them to discover the distributive property of multiplication. Students are **not** required to use the term "distributive property".
	2. perform mixed operations of not more than four numbers		The mixed operations include: • mixed operations of division and addition • mixed operations of division and subtraction • mixed operations of division and multiplication
	3. perform mixed arithmetic operations of not more than five numbers		Teachers may use examples to enable students to understand that using the properties of addition and multiplication can sometimes speed up the operations.

Learning Unit	Learning Objective	Time	Remarks
	4. solve problems		Solving problems involving direct proportion by the unitary method is required. Students are **not** required to use the term "direct proportion". Teachers should encourage students to solve complicated problems by parts. Note: (i) Mixed operations may involve more than one bracket. But operations involving multiple levels of brackets, such as $(4 - (2 - 1)) \div 3$, are **not** required. (ii) Students are required to recognise how to estimate the result of calculations.
4N6 Fractions (II)	1. recognise the concepts of proper fractions, improper fractions and mixed numbers	9	Students are required to recognise that a mixed number is the sum of a whole number

Learning Unit	Learning Objective	Time	Remarks
			and a proper fraction.
	2. perform the interconversions between improper fractions and mixed numbers		Interconversions such as "$\frac{6}{2}$ and 3" are required.
	3. recognise the concepts of expanding fractions and reducing fractions		Students are required to recognise the concept of fractions in their lowest terms.
	4. compare the magnitude of fractions with the same denominators		Comparing the magnitude of fractions and whole numbers is required.
	5. perform addition and subtraction of not more than three fractions with the same denominators		Addition and subtraction of fractions and whole numbers are required.
	6. perform mixed operations of addition and subtraction of three fractions with the same denominators		Mixed operations of addition and subtraction of fractions and whole numbers are required.
	7. solve problems		

Learning Unit	Learning Objective	Time	Remarks
			Note: (i) The result of calculations can be expressed as mixed numbers or improper fractions in the lowest terms. (ii) Students are required to recognise how to estimate the result of calculations.
4N7 Decimals (I)	1. recognise the concept of decimals 2. recognise the concepts of tenth, hundredth, thousandth and ten thousandth places 3. compare the magnitude of decimals	3	Students are required to understand the relation between decimals and fractions and that they are two forms of expressing numbers. Students are also required to recognise the concepts of one decimal place, two decimal places, three decimal places and four decimal places. Comparing the magnitude of whole numbers, fractions with denominators being factors of 100, and decimals is required.

Learning Unit	Learning Objective	Time	Remarks
	4. recognise the daily life applications of decimals		Students are required to interconvert between units, for example: 1.234 L = 1234 mL 23 dollars 50 cents = 23.5 dollars Complicated interconversions between units are **not** required. For example: 0.4 km = 40000 cm Note: Interconversion between the units of time is dealt with in Learning Unit 6M4.
4N8 Decimals (II)	1. perform addition and subtraction of not more than three numbers	4.5	The decimals involved are confined to that of one decimal place or two decimal places. The addition and subtraction of decimals and whole numbers are required.
	2. perform mixed operations of addition and subtraction of three numbers		The decimals involved are confined to that of one decimal place or two decimal places.

Learning Unit	Learning Objective	Time	Remarks
	3. solve problems		The mixed addition and subtraction of decimals and whole numbers is required. Note: (i) Students are required to recognise how to estimate the result of calculations. (ii) The numbers of digits involved in the additions and subtractions of decimals should not exceed that involved in the additions and subtractions of whole numbers as required in Learning Unit 3N4. For example, the following additions and subtractions of decimals are **not** required: • 1.2345 + 5.6 • 123.4 + 56.78 • 1234 – 5.6

Learning Unit	Learning Objective	Time	Remarks
Measures Strand			
4M1 Perimeter (I)	1. recognise the concept of perimeter	6.5	Students are **not** required to find the perimeters of 2-D shapes such as: 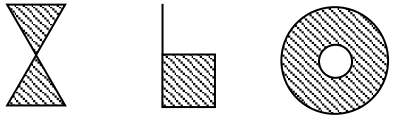
	2. measure and compare the perimeters of 2-D shapes		Students are required to recognise how to estimate the result of measurements after they have acquired the experience of measurements.
	3. recognise and use the formulae for finding the perimeters of squares and rectangles		Students are required to find the perimeters of 2-D shapes formed by squares and rectangles. Operations may involve more than five numbers.

Learning Unit	Learning Objective	Time	Remarks
4M2 Area (I)	1. recognise the concept of area 2. compare intuitively the areas of 2-D shapes 3. compare directly the areas of 2-D shapes 4. compare the areas of 2-D shapes in improvised units	7	Students are required to compare indirectly the areas of 2-D shapes, for examples: • If A and B are of equal area and the area of B is smaller than that of C, the area of A is smaller than that of C • If the area of A is greater than that of B and the area of B is greater than that of C, the area of A is greater than that of C • If the area of A is smaller than that of B and also smaller than that of C, the area of A is the smallest. Students are required to choose appropriate improvised units for taking measurements.

Learning Unit	Learning Objective	Time	Remarks
	5. recognise square centimetre (cm^2) and square metre (m^2)		
	6. measure and compare the areas of 2-D shapes in square centimetre and square metre		Students are required to recognise how to estimate the result of measurements after they have acquired the experience of measurements. Interconversion between square centimetre and square metre is **not** required.
	7. recognise and use the formulae for areas of squares and rectangles		Students are required to find the areas of 2-D shapes formed by squares and rectangles. Operations may involve more than five numbers.
Shape and Space Strand			
4S1 Quadrilaterals (III)	1. recognise the concept and properties of rhombuses	8	The properties of rhombuses include: • all four sides are equal in length

Learning Unit	Learning Objective	Time	Remarks
	2. draw and make rhombuses 3. recognise the relations between different types of quadrilaterals		• opposite sides are parallel Teachers may let students use different methods to draw and make rhombuses. The relations include: • all squares are rectangles • all squares, rectangles and rhombuses are parallelograms • all squares are rhombuses Teachers may illustrate the inclusion relations between different types of quadrilaterals by using the diagrams, such as Venn diagrams or tree diagrams. Students are **not** required to use the term "inclusion relation".

Learning Unit	Learning Objective	Time	Remarks
4S2 Dissecting and forming shapes	1. dissect a polygon into smaller polygons 2. form a polygon by smaller polygons	3	
4S3 Directions and positions (III)	1. recognise the four directions: southeast, northeast, southwest and northwest 2. use the compass to measure directions	3.5	Students are required to recognise the short forms “SE”, “NE”, “SW” and “NW”. The directions include east, south, west, north, southeast, northeast, southwest and northwest.
Data Handling Strand			
4D1 Bar charts (II)	1. recognise bar charts of greater frequency counts 2. interpret bar charts of greater frequency counts 3. recognise the concept of approximate values	5	Bar charts in horizontal and vertical forms are required. Students are required to get approximate values of data by rounding off.

Learning Unit	Learning Objective	Time	Remarks
	4. construct bar charts of greater frequency counts		Students are required to: ● classify data ● use frequency tables for recording data ● choose the one-to-ten, one-to-fifty or one-to-hundred representations according to the magnitude of the data ● round off data to fit the chosen representation Teachers may let students use IT to construct bar charts of greater frequency counts. Note: Only the bar charts using the one-to-ten, one-to-fifty and one-to-hundred representations are required.

Learning Unit	Learning Objective	Time	Remarks
Further Learning Unit			
4F1 Inquiry and investigation	Through various inquiry activities and mathematical modelling learning activities, construct and apply mathematical knowledge, further improve the ability to inquire, communicate, reason, conceptualise mathematical concepts and apply mathematics	10	This is **not** an independent and isolated learning unit. Teachers may make use of the suggested lesson time to engage students in various learning activities, such as activities related to enrichment topics, cross-learning unit activities, and cross-KLA activities based on mathematical topics. Among the learning activities, teachers should plan about 2–3 hours of mathematical modelling learning activities for students in each school year.
Enrichment Topics			
4E1 Eulerian paths	1. recognise Eulerian paths 2. explore the properties of a figure that has an Eulerian path	-	Teachers may introduce Eulerian paths through the Seven Bridges of Königsberg problem.
4E2 Sorting diagrams	1. recognise sorting diagrams and their applications	-	Students may use various sorting diagrams to sort data such as numbers and shapes and to display their findings.

Learning Unit	Learning Objective	Time	Remarks
Primary 5			
Number Strand			
5N1 Multi-digit numbers	1. recognise the concept of multi-digit numbers	3	Students are required to: ● count, read and write numbers ● perform counting onwards and counting backwards ● recognise multi-digit odd and even numbers
	2. compare the magnitude of numbers		
	3. use rounding off to obtain approximate value of multi-digit numbers		Rounding off multi-digit numbers to the nearest thousands, ten thousands, hundred thousands, millions, ten millions or hundred millions is required, such as: The approximate value of 123456789 is 123460000 to the nearest ten thousands.
	4. estimate large quantities		

Learning Unit	Learning Objective	Time	Remarks
5N2 Fractions (III)	1. compare the magnitude of not more than three fractions with different denominators 2. perform addition and subtraction of not more than three fractions with different denominators 3. perform mixed operations of addition and subtraction of three fractions with different denominators 4. solve problems	8.5	Comparing the magnitude of fractions and whole numbers is required. Addition and subtraction of fractions and whole numbers are required. Mixed operations of addition and subtraction of fractions and whole numbers are required. Note: (i) Complicated comparison and mixed operations of addition and subtraction of fractions with different denominators should be avoided. (ii) When the operations and comparison involving three fractions with different denominators, all denominators should

Learning Unit	Learning Objective	Time	Remarks
			not exceed 12. (iii) The result of calculations can be expressed as mixed numbers or improper fractions in the lowest terms. (iv) Students are required to recognise how to estimate the result of calculations.
5N3 Fractions (IV)	1. perform multiplication of not more than three numbers 2. solve problems	8	Multiplication of fractions and whole numbers is required. Multiplication of three fractions should not involve more than one mixed number. Note: (i) Complicated multiplication of fractions should be avoided. (ii) The result of calculations can be expressed as mixed numbers or

Learning Unit	Learning Objective	Time	Remarks
			improper fractions in the lowest terms. (iii) Students are required to recognise how to estimate the result of calculations.
5N4 Decimals (III)	1. perform multiplication of a number and 10, 100, 1000 2. perform multiplication of a number and 0.1, 0.01, 0.001 3. perform multiplication of two numbers	7	The number should be a whole number or a decimal. The number should be a whole number or a decimal. Students are also required to perform the multiplication of decimals and whole numbers. The decimal places of the decimals and the numbers of digits involved in the multiplications of decimals, except the multiplications in Learning Objectives 5N4.1 and 5N4.2, should respectively be one or two and not exceed that involved in the multiplications of whole numbers as required in Leaning Unit 4N1. For example, the

Learning Unit	Learning Objective	Time	Remarks
	4. solve problems		following multiplications of decimals are not required: • 0.124×3.9 • 12.4×3.42 • 12.41×2.6 Note: (i) Students may round off the result of calculations to the nearest tenth or hundredth. (ii) Students are required to recognise and use the symbol "≈". (iii) Students are required to recognise how to estimate the result of calculations.

Learning Unit	Learning Objective	Time	Remarks
5N5 Fractions (V)	1. further recognise the concept of fractions	9.5	Students are required to recognise that fractions can be regarded as the quotient or the ratio of two whole numbers. The symbol of ratio ":" needs **not** be introduced.
	2. perform division of not more than three numbers		Division of fractions and whole numbers is required. Division of three fractions should not involve more than one mixed number.
	3. perform mixed arithmetic operations of three numbers		Mixed arithmetic operations of fractions and whole numbers is required. Mixed operations of multiplication and division of three fractions should not involve more than one mixed number.
	4. solve problems		Solving problems involving direct proportion

Learning Unit	Learning Objective	Time	Remarks
			by the unitary method is required. Students are **not** required to use the term "direct proportion". Problems involving finding the original numbers, such as the following problem, are tackled in Learning Units 5A2 and 6A1: • if $\frac{1}{3}$ of a number is 30, find this number • if $\frac{2}{3}$ of a number is 30, find this number Problems involving finding the fraction of a number by which it is greater or less than another number, and finding the fractional change of a number when it changes to another number are **not** required. For example: • by what fraction of 80 is 100 greater

Learning Unit	Learning Objective	Time	Remarks
			than it • by what fraction of 100 is 80 less than it • what is the fractional increase when 100 is increased to 120 • what is the fractional decrease when 120 is decreased to 100 Note: (i) Complicated division and mixed arithmetic operations of fractions should be avoided. (ii) The result of calculations can be expressed as mixed numbers or improper fractions in the lowest terms. (iii) Students are required to recognise how to estimate the result of calculations.
Algebra Strand			

Learning Unit	Learning Objective	Time	Remarks
5A1 Elementary algebra	1. recognise the use of letters to represent numbers 2. use algebraic expressions to represent the operations of and relations between quantities that are described in words and involve unknown quantities	6	Students are required to recognise the representations, such as: • $3x$ is $3 \times x$, $x \times 3$ or $x + x + x$ • $\frac{x}{3}$ is $x \div 3$, $\frac{1}{3} \times x$ or $x \times \frac{1}{3}$ Note: The algebraic expressions in this learning unit should involve only one unknown quantity.
5A2 Simple equations (I)	1. recognise the concept of equations 2. solve simple equations	8	The types of simple equations include: 1. $x + b = c$ 2. $x - b = c$

Learning Unit	Learning Objective	Time	Remarks
	3. solve problems by using equations		3. $ax = b$ 4. $\frac{x}{a} = b$ 5. $ax + b = c$ 6. $ax - b = c$ 7. $\frac{x}{a} + b = c$ 8. $\frac{x}{a} - b = c$ where a, b and c are whole numbers, and a is nonzero. Teachers should use balance to model and explain the process of solving an equation. Note: Students are required to recognise how to check the answers after solving equations or problems.

Learning Unit	Learning Objective	Time	Remarks
Measures Strand			
5M1 Area (II)	1. recognise the concept of height of triangles and quadrilaterals 2. recognise and use the formulae for finding the areas of parallelograms, triangles and trapeziums 3. find the areas of polygons	8.5	Students are only required to recognise the corresponding height of each side of triangles and convex quadrilaterals. Students are **not** required to use the term "convex quadrilaterals". Note: Operations in this learning unit may involve more than five numbers.
5M2 Volume (I)	1. recognise the concept of volume 2. compare intuitively the volumes of objects	7	

Learning Unit	Learning Objective	Time	Remarks
	3. recognise cubic centimetre (cm^3)		
	4. measure and compare the volumes of objects in cubic centimetre		Students are required to recognise how to estimate the result of measurements after they have acquired the experience of measurements.
	5. recognise cubic metre (m^3)		Interconversion between cubic centimetre and cubic metre is **not** required.
	6. recognise and use the formulae for finding the volumes of cubes and cuboids		Students are required to find the volumes of simple 3-D shapes formed by cubes and cuboids. Finding the length of a cube from its volume is **not** required. Note: Operations in this learning unit may involve more than five numbers.

Learning Unit	Learning Objective	Time	Remarks
Shape and Space Strand			
5S1 Circles	1. recognise the concept and basic properties of circles	2.5	The concepts of centre, radius, diameter and circumference of a circle are required. The basic properties of circles include: ● all the points on a circle are at equidistant from its centre ● with line segments joining any two end points on a circle, those passing through the centre are the longest ● the length of the diameter is twice the length of the radius
	2. draw circles		Teachers may let students use different methods to draw circles, including using compasses. Teachers may let students freely create their own drawings which are formed by circles,

Learning Unit	Learning Objective	Time	Remarks
			and let them appreciate the beauty of geometric shapes. Note: This Learning Unit should be taught prior to the Learning Unit 5S2 "3-D shapes (III)".
5S2 3-D shapes (III)	1. recognise the cross sections of prisms and cylinders	11	Students are required to recognise that the sizes and shapes of the cross sections of the prisms and the cylinders that are parallel to the bases are the same as that of the bases. Students are **not** required to use the term "uniform cross sections".
	2. recognise the cross sections of pyramids and cones		Students are required to recognise that the cross sections of pyramids and cones, which are parallel to their bases, their sizes are different from that of the bases.

Learning Unit	Learning Objective	Time	Remarks
	3. recognise the concepts of vertices and edges of a 3-D shape		
	4. recognise the concepts of cubes and cuboids		Students are required to recognise and make the nets of cubes and cuboids. Teachers should arrange the activity of making frameworks of cubes and cuboids to enhance students' recognition of the concepts of vertices, edges and faces of 3-D shapes. At primary level, teachers should use cuboids that are not cubes as examples to explain the concepts of cuboids.
	5. recognise the nets of cylinders		
	6. recognise the concept and basic properties of spheres		The concepts of the centre of a sphere are required. The basic properties of spheres include: ● all the points on the sphere are at

Learning Unit	Learning Objective	Time	Remarks
			equidistant from the centre • all the cross sections of a sphere are circles Teachers may make use of the concrete objects or the computer software to help students recognise the basic properties of spheres. Note: This Learning Unit should be taught subsequent to the Learning Unit 5S1 "Circles".
Data Handling Strand			
5D1 Bar charts (III)	1. recognise compound bar charts 2. interpret compound bar charts	6	Compound bar charts in horizontal and vertical forms are required. Students may start to write multi-digit numbers in ways such as 1 million and 10 million in the strand of Data Handling, but

Learning Unit	Learning Objective	Time	Remarks
			they are required to avoid inappropriate style of writing such as 130 hundred and 3 hundred thousand.
	3. construct compound bar charts		Students are required to: ● choose the one-to-thousand, one-to-ten thousand or one-to-hundred thousand representations according to the magnitude of the data ● round off data to fit the chosen representation Teachers may let students use IT to construct compound bar charts. Note: Only the compound bar charts using the one-to-thousand, one-to-ten thousand or one-to-hundred thousand representations are required.

Learning Unit	Learning Objective	Time	Remarks
Further Learning Unit			
5F1 Inquiry and investigation	Through various inquiry activities and mathematical modelling learning activities, construct and apply mathematical knowledge, further improve the ability to inquire, communicate, reason, conceptualise mathematical concepts and apply mathematics	10	This is **not** an independent and isolated learning unit. Teachers may make use of the suggested lesson time to engage students in various learning activities, such as activities related to enrichment topics, cross-learning unit activities, and cross-KLA activities based on mathematical topics. Among the learning activities, teachers should plan about 2–3 hours of mathematical modelling learning activities for students in each school year.
Enrichment Topics			
5E1 Chinese numerals and Roman numerals	1. recognise the elaborate form of Chinese numerals 2. recognise traditional Chinese numerals and Roman numerals 3. explore the advantages of using the denary number system for representing numbers	-	The rules for the representation of numbers using traditional Chinese numerals and Roman numerals can be introduced.

Learning Unit	Learning Objective	Time	Remarks
5E2 Exploration of 3-D shapes	1. understand the relations between the number of sides of the base, the number of faces, the number of edges and the number of vertices of a prism 2. understand the relations between the number of sides of the base, the number of faces, the number of edges and the number of vertices of a pyramid	-	

Learning Unit	Learning Objective	Time	Remarks
Primary 6			
Number Strand			
6N1 Decimals (IV)	1. perform division of a number by 10, 100, 1000 2. perform division of a number by 0.1, 0.01, 0.001 3. perform the division involving decimal(s)	9.5	The number should be a whole number or a decimal. The number should be a whole number or a decimal. The division involving decimal(s) include: ● decimal ÷ whole number ● whole number ÷ whole number (the quotient is a decimal) ● whole number ÷ decimal ● decimal ÷ decimal The numbers of digits involved in the divisions of decimals, except the divisions in Learning Objectives 6N1.1 and 6N1.2, should

Learning Unit	Learning Objective	Time	Remarks
			not exceed that involved in the divisions of whole numbers as required in Leaning Unit 4N2. For example, the following divisions are not required: • 12.34 ÷ 5.6 (=123.4 ÷ 56) • 12.3 ÷ 5.67 (=1230 ÷ 567) • 123 ÷ 0.4 (=1230 ÷ 4)
	4. perform mixed arithmetic operations of not more than four numbers		Requirements for the numbers of digits involved in the multiplication and division of decimals are the same as those in the Learning Units 5N4 and 6N1 respectively.
	5. solve problems		Note: (i) Students may round off the result of calculations to the nearest tenth or

Learning Unit	Learning Objective	Time	Remarks
			hundredth. (ii) Students are required to recognise and use the symbol "≈". (iii) Students are required to recognise how to estimate the result of calculations.
6N2 Decimals (V)	1. perform the interconversion between a decimal and a fraction 2. compare the magnitude of fractions by converting them into decimals	4.5	Note: (i) Students may round off the result of calculations to the nearest tenth or hundredth. (ii) Students are required to recognise how to estimate the result of calculations.

Learning Unit	Learning Objective	Time	Remarks
6N3 Percentages (I)	1. recognise the concept of percentages 2. perform the interconversion between a percentage and a decimal 3. perform the interconversion between a percentage and a fraction	7	Teachers should use daily life examples to let students recognise the concept of percentages. Students are required to recognise the relation between percentages and fractions.
6N4 Percentages (II)	1. solve problems	7	Problems include simple problems related to percentages and percentage changes, such as: ● what percentage of 50 is 30 ● what is 60% of 50 ● what is the result when 50 is increased by 10% ● what is the result when 50 is decreased by

Learning Unit	Learning Objective	Time	Remarks
			10% Problems involving finding the original numbers, such as the following problem, are tackled in Learning Unit 6A1: If 75% of a number is 30, find this number. Problems involving discount, interest or complicated problems related to percentages and percentage changes are **not** required. For example: ● what percentage is 100 more than 80 ● what percentage is 80 less than 100 ● what is the percentage increase from 100 to 120 ● what is the percentage decrease from 120 to 100 Note: Students are required to recognise how to estimate the result of calculations.

Learning Unit	Learning Objective	Time	Remarks
Algebra Strand			
6A1 Simple equations (II)	1. solve simple equations involving non-integral coefficients or constants	9	The types of simple equations include: 1. $ax + b = c$ 2. $ax - b = c$ 3. $a\,(x + b) = c$ 4. $a\,(x - b) = c$ 5. $dx + ex = c$ 6. $dx - ex = c \quad (d \neq e)$ where a, b and c can be whole numbers, fractions, decimals or percentages; d and e must be whole numbers; and a, d and e are nonzero. Teachers should use balance to model and explain the process of solving an equation.

Learning Unit	Learning Objective	Time	Remarks
	2. solve problems by using equations		Students are required to use equations to solve problems in other learning units, such as: • problems on finding the lengths of sides of a 2-D shape from its perimeter or area • problems on finding the original values given its related percentages or fractions Note: Students are required to recognise how to check the answers after solving an equation or a problem.
Measures Strand			
6M1 Angle (degree)	1. recognise degree (°) 2. measure and compare the sizes of angles in degree	4	 Students are required to measure angles within 360° (0° and 360° are **not** required) using protractors. Students are required to name angles with the

Learning Unit	Learning Objective	Time	Remarks
			symbol "$\angle$", such as $\angle A$ and $\angle ABC$. Students are required to recognise reflex angles, straight angles and round angles. Students are required to recognise how to estimate the result of measurements after they have acquired the experience of measurements.
	3. draw angles of given sizes		Students are required to draw angles within $360°$ (0° and 360° are **not** required).
6M2 Volume (II)	1. recognise the relation between capacity and volume	8	Students are required to recognise that m^3, cm^3, L and mL are units of volume of liquid.
	2. find the volumes of irregular solids by the water displacement method		Students are required to find the volumes of irregular solids by using tanks, measuring cups and overflow vessels. Note: Operations in this learning unit may involve more than five numbers.

Learning Unit	Learning Objective	Time	Remarks
6M3 Perimeter (II)	1. recognise pi 2. recognise and use the formula for circumference	3.5	Student are required to recognise that pi can be represented by " π ". Students are required to: • find the perimeters of circles, semicircles, quarter-circles and 2-D shapes formed by them • find the diameter and radius of a circle from its circumference Students are only required to use $\frac{22}{7}$ or 3.14 as approximate values of π for calculations. Finding the length of an arc given its angle subtended at the centre is **not** required. Note: (i) Requirements for the numbers of digits involved in the multiplication and

Learning Unit	Learning Objective	Time	Remarks
			division of decimals respectively in Learning Objectives 5N4.3 and 6N1.3 are not applicable to this learning unit. (ii) Operations may involve more than five numbers. (iii) Complicated calculations should be avoided.
6M4 Speed	1. perform the interconversion between units of time	10	Students are only required to interconvert between **hour and minute, minute and second**, such as 90 minutes = 1.5 hours / $1\frac{1}{2}$ hours, 180 seconds = 3 minutes.
	2. solve problems related to time intervals		Given any two of the starting time, finishing time and time interval, students are required to find the unknown quantity/time. Problems on calculations involving hours,

Learning Unit	Learning Objective	Time	Remarks
			minutes and seconds at the same time are **not** required.
	3. recognise the concept of speed		
	4. compare intuitively the speed of objects		
	5. compare directly the speed of objects		
	6. compare the speed of objects in improvised units		
	7. recognise metres per second (m/s) and kilometres per hour (km/h)		Interconversion between metres per second and kilometres per hour is **not** required.
	8. interpret travel graphs		
	9. solve problems related to speed		Problems on chasing are **not** required. Operations may involve more than five numbers.

Learning Unit	Learning Objective	Time	Remarks
			Note: Teachers may consider using real-life examples or related learning elements in Science Education or Technology Education KLAs to enhance learning and teaching.
6M5 Area (III)	1. recognise the formula for areas of circles	3	Students may recognise the formula for areas of circles in the following way: • by folding a circular piece of paper into 4 equal parts and further folding it into 8, 16 … equal parts, students can see that each part looks like a triangle. Students can then explore the formula for areas of circles by regarding those equal parts as triangles 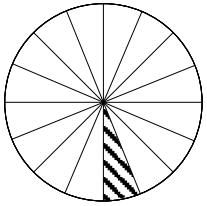 Teachers may encourage students to recognise

Learning Unit	Learning Objective	Time	Remarks
	2. use the formula for finding the areas of circles		the stories of ancient Chinese mathematicians on finding the value of pi. Emphasis is placed on the contributions of Chinese mathematicians on finding the value of pi, but not on the explanation on the method of calculations. Students are only required to use $\frac{22}{7}$ or 3.14 as approximate values of π for calculations. Students are **not** required to: ● find the diameter or radius of a circle from its area ● find the area of a sector Note: (i) Requirements for the numbers of digits involved in the multiplication and division of decimals respectively in

Learning Unit	Learning Objective	Time	Remarks
			Learning Objectives 5N4.3 and 6N1.3 are not applicable to this learning unit. (ii) Operations may involve more than five numbers (iii) Complicated calculations should be avoided
Shape and Space Strand			
6S1 Symmetry	1. recognise the concept of 2-D shapes having axial symmetry 2. draw and make 2-D shapes having axial symmetry	4.5	Students are required to determine whether a 2-D shape is axially symmetric, and find the axes of symmetry of the 2-D shapes that are axial symmetry. Students are required to recognise that squares, rectangles, isosceles triangles, equilateral triangles, rhombuses and circles are axially symmetry.

Learning Unit	Learning Objective	Time	Remarks
Data Handling Strand			
6D1 Averages	1. recognise the concept of averages 2. find the average of a group of data 3. solve problems	3.5	Teachers should explain the concept of averages by using statistical charts. Students are required to recognise how to estimate the result of calculations and the average of the group of data from statistical charts. Note: Operations in this learning unit may involve more than five numbers.
6D2 Broken line graphs	1. recognise broken line graphs 2. interpret broken line graphs	4.5	

Learning Unit	Learning Objective	Time	Remarks
	3. construct broken line graphs		Teachers may let students use IT to construct broken line graphs of greater frequency counts. Note: Teachers may consider using real-life examples or related learning elements in Science Education or Technology Education KLAs to enhance learning and teaching.
6D3 Pie charts	1. recognise pie charts 2. interpret pie charts	4	Students are only required to interpret pie charts involving simple calculations. For example, the angle at the center of each sector is a multiple of 30° or 45°. Students are **not** required to measure the angles at the centre of a pie chart for calculations. Teachers may let students use IT to construct pie charts.

Learning Unit	Learning Objective	Time	Remarks
6D4 Uses and abuses of statistics	1. present the data with appropriate statistical charts 2. discuss and recognise the uses and abuses of statistical charts in daily life	3	Teachers should discuss with students on choosing appropriate statistical charts from pictograms, bar charts, broken line graphs and pie charts for presenting data.
Further Learning Unit			
6F1 Inquiry and investigation	Through various inquiry activities and mathematical modelling learning activities, construct and apply mathematical knowledge, further improve the ability to inquire, communicate, reason, conceptualise mathematical concepts and apply mathematics	10	This is **not** an independent and isolated learning unit. Teachers may make use of the suggested lesson time to engage students in various learning activities, such as activities related to enrichment topics, cross-learning unit activities, and cross-KLA activities based on mathematical topics. Among the learning activities, teachers should plan about 2–3 hours of mathematical modelling learning activities for students in each school year.
Enrichment Topics			

Learning Unit	Learning Objective	Time	Remarks
6E1 Rotational symmetry	1. recognise the concept of 2-D shapes having rotational symmetry 2. draw and make 2-D shapes having rotational symmetry	-	
6E2 Non-metric units	1. recognise the non-metric units in daily life 2. perform the interconversion between non-metric units and metric units	-	Non-metric units can include foot, inch, pound, catty and tael. Students may use calculators in performing the conversion.

Total lesson time for P4–P6 (Key Stage Two): 285 hours

Flow chart: Primary Mathematics Curriculum

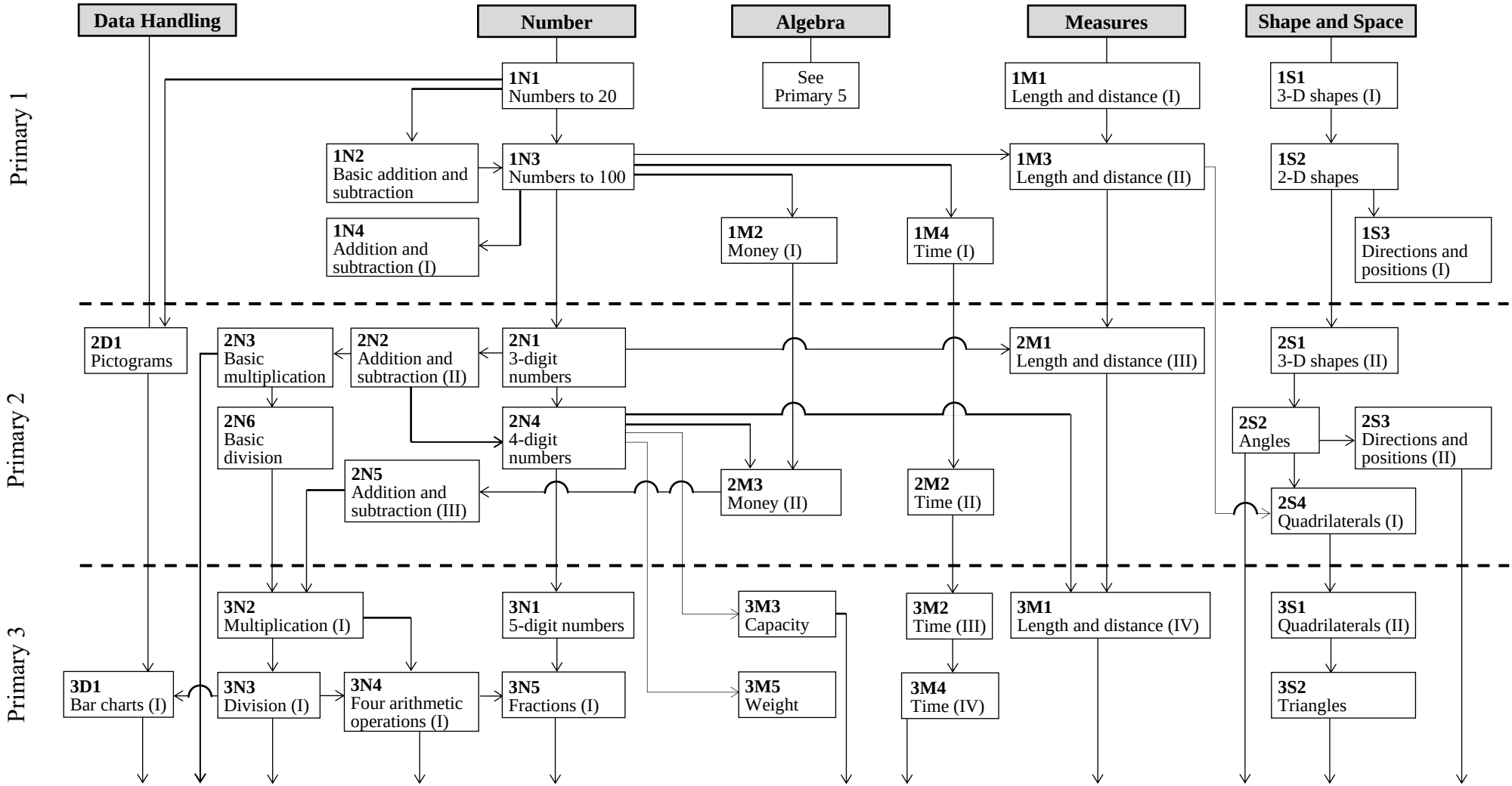

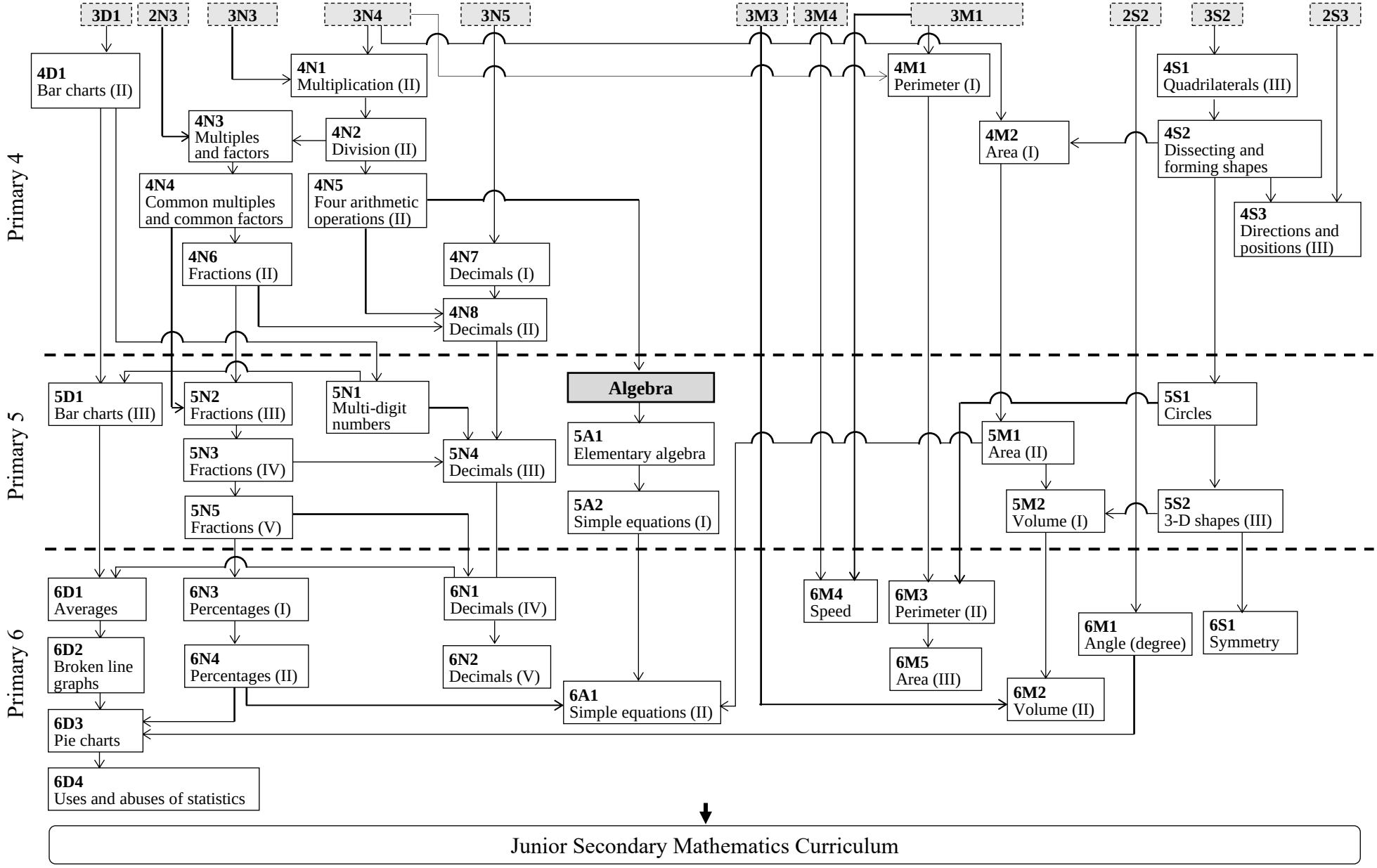
3D1
2N3
3N3
3N4
3N5
3M3
3M4
3M1
2S2
3S2
2S3
Primary 4
4D1 Bar charts (II)
4N1 Multiplication (II)
4M1 Perimeter (I)
4S1 Quadrilaterals (III)
4N3 Multiples and factors
4N2 Division (II)
4M2 Area (I)
4S2 Dissecting and forming shapes
4N4 Common multiples and common factors
4N5 Four arithmetic operations (II)
4S3 Directions and positions (III)
4N6 Fractions (II)
4N7 Decimals (I)
4N8 Decimals (II)
Primary 5
5D1 Bar charts (III)
5N2 Fractions (III)
5N1 Multi-digit numbers
Algebra
5S1 Circles
5A1 Elementary algebra
5M1 Area (II)
5N3 Fractions (IV)
5N4 Decimals (III)
5A2 Simple equations (I)
5M2 Volume (I)
5S2 3-D shapes (III)
5N5 Fractions (V)
Primary 6
6D1 Averages
6N3 Percentages (I)
6N1 Decimals (IV)
6M4 Speed
6M3 Perimeter (II)
6M1 Angle (degree)
6S1 Symmetry
6D2 Broken line graphs
6N4 Percentages (II)
6N2 Decimals (V)
6M5 Area (III)
6A1 Simple equations (II)
6M2 Volume (II)
6D3 Pie charts
6D4 Uses and abuses of statistics
Junior Secondary Mathematics Curriculum

Membership of the CDC Committee on Mathematics Education

(From September 2015 to August 2017)

Chairperson:	Mr LAM Ka-yiu	(from September 2016)
	Mr SUM Sing-wah	(until August 2016)
Vice-chairperson:	Mr WAI Kwok-keung (EDB)	(from March 2016)
	Mr LEE Pak-leung (EDB)	(until February 2016)
Members:	Dr CHAN Wai-hong	
	Prof CHENG Zi-juan	
	Ms CHEUNG Yuet-mei	(until August 2016)
	Prof CHING Wai-ki	
	Ms CHONG Hiu-li, Jackie	
	Mr CHU Kan-kong (HKEAA)	
	Dr LAW Huk-yuen	
	Mr LEE Wing-yeong	
	Mr MOK Sui-kei	(from October 2016)
	Mr NG Siu-kai (EDB)	
	Mr POON Wai-hoi, Bobby	
	Mr SHUM Yiu-kwong	
	Mr SIU Kwok-leong	
	Mr TANG Hok-shu	
	Mr TSANG Kin-fun	
	Ms TSUI Kwan-yuk	
	Ms TSUI Fung-ming, Karin	
	Ms WONG Chui-han, Ellen	
	Ms WONG Tin-ling	(from October 2016)
Secretary:	Dr NG Yui-kin (EDB)	

Membership of the CDC Committee on Mathematics Education

(From September 2017 to August 2019)

Chairperson:	Mr LAM Ka-yiu
Vice-chairperson:	Mr WAI Kwok-keung (EDB)
Members:	Mr CHAN Sai-hung
	Dr CHAN Wai-hong
	Ms CHAN Wai-yi
	Mr CHU Kan-kong (HKEAA)
	Mr CHU Lap-foo
	Ms CHUNG Po-loi
	Mr LAM Ka-yiu
	Dr LEE Man-sang, Arthur
	Ms LEE Yuk-kit, Kitty
	Mr LEUNG Kwok-kei
	Dr LIU Kam-moon, Lester
	Mr MOK Sui-kei
	Mr NG Siu-kai (EDB)
	Mr PUN Chi-hang
	Ms WONG Chui-han, Ellen
	Mr YOUNG Chun-piu
	Dr YU Leung-ho Philip
Secretary:	Dr NG Yui-kin (EDB)

Membership of the CDC-HKEAA Committee on Mathematics Education

(From September 2015 to August 2017)

Chairperson:	Mr LAM Ka-yiu	
Vice-chairperson:	Mr WAI Kwok-keung (EDB)	(from March 2016)
	Mr LEE Pak-leung (EDB)	(until February 2016)
Members:	Mr CHEUNG Kam-tim, Thomas	
	Mr CHIU Kwok-sing	
	Mr CHIU Hong-ming	
	Mr CHU Kan-kong (HKEAA)	
	Mr LAU Chi-wah	
	Dr LEUNG Yuk-lun, Allen	
	Ms POON Suet-fan	
	Dr SHIU Wai-chee	
	Mr WONG Kwong-wing	
	Dr YU Leung-ho, Phillip	
Secretary:	Dr NG Yui-kin (EDB)	

Membership of the Ad-hoc Committee on Primary Mathematics Curriculum

(From December 2015 to June 2022)

Convener:	Ms AU Wing-mei (EDB)
Members:	Mr CHEUNG Lit-tung
	Ms CHONG Hiu-li, Jackie
	Ms CHUNG Po-loi
	Ms LAW Suk-yee
	Dr LEUNG King-shun
	Dr LEUNG Yuk-lun, Allen
	Ms SHUM Kwok-ching
	Mr SHUM Yiu-kwong
	Mr TANG Hok-shu
	Mr TSANG Kin-fun
	Ms WONG Chui-han, Ellen
Secretary:	Ms LEUNG Kit-ying (EDB)

Membership of the Ad Hoc Committee for Integrating Mathematical Modelling into Primary Mathematics Curriculum

(From October 2025)

Convener:	Ms AU Wing-mei (EDB)
Members:	Mr CHAN Kwan-chun
	Mr CHAN Ting-hin
	Ms CHUI Lai-yin
	Mr LAI Wing-hong
	Mr LAM Ka-hong, Dicky
	Mr LAM Mau-sum
	Dr LEUNG King-shun
	Dr WANG Dichen
Secretary:	Mr TSANG Yu-man (EDB)

