Enriched Technology Education KLA Curriculum

S1 Teaching Material

7

Technology & Environment & Production Process

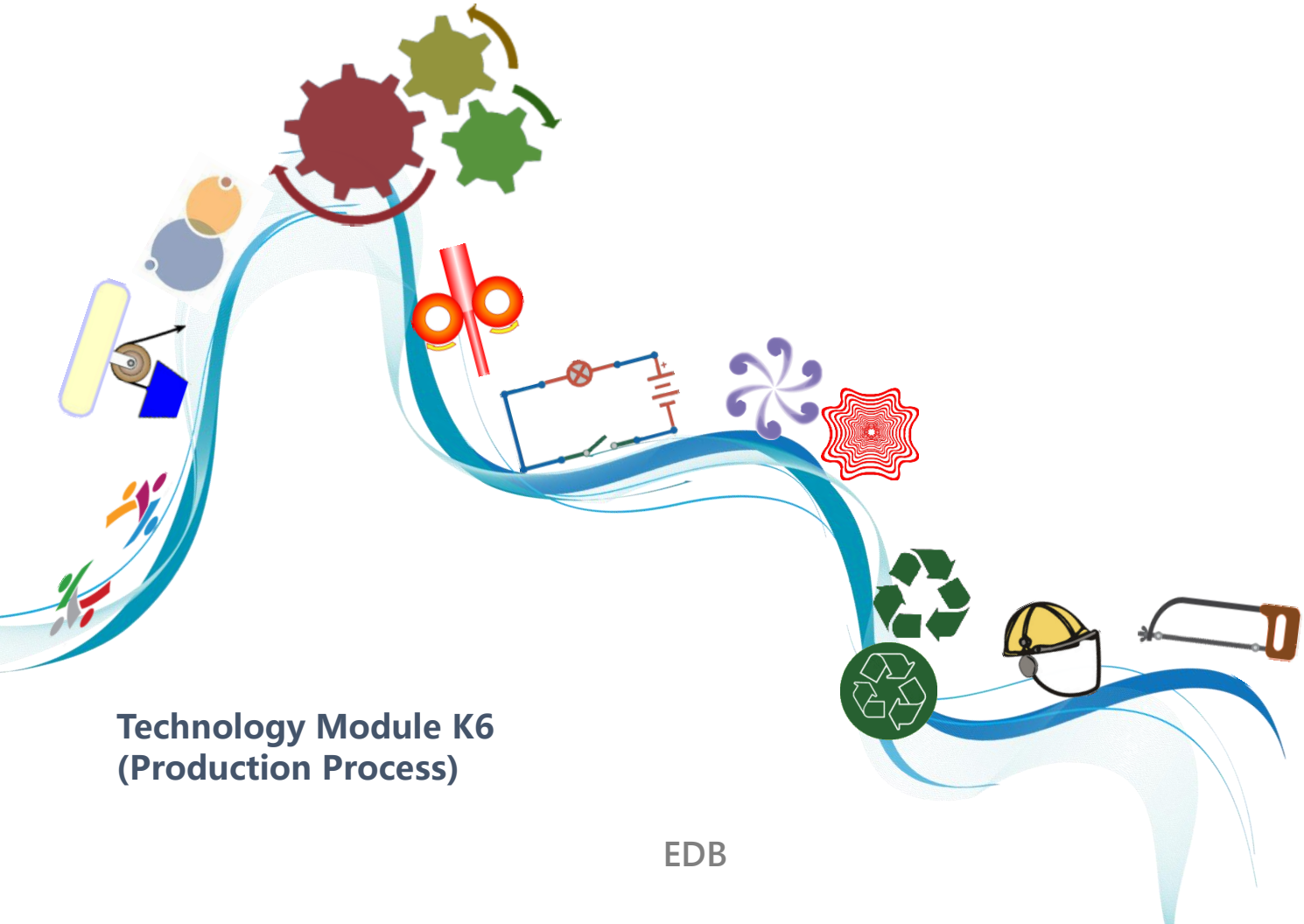

Technology Module K6
(Production Process)

EDB

Preface

To support the implementation of the Enriched Technology Education Key Learning Area Curriculum (Enriched Curriculum) at junior secondary level, the Technology Education Section of Curriculum Development Institute, Education Bureau, has developed a set of learning and teaching resource materials covering technological subjects learning element modules for teachers' reference and use.

The purpose of providing this set of teaching resource materials is to enable teachers to adopt the related technological subjects learning element modules under the Enriched Curriculum for students to acquire thorough understanding and mastery of the three key aspects in Technology Education Key Learning Area, viz. the technological understanding, technological capability and technological awareness, using a flexible approach with reference to the suggested learning progress.

The content of this learning and teaching resources was compiled with project approach. It gives students a purposeful and meaningful learning context through a series of diversified activities such as design projects, case studies, technological exploration and simulation experiments, and thus arouses their interest in technology and devotion in learning, as well as nurtures their ability in problem-solving, realisation, innovation and spirit of entrepreneurship.

For comments and suggestions related to this set of learning and teaching resources, please send to:
Chief Curriculum Development Officer
(Technology Education)
Technology Education Section
Curriculum Development Institute
Education Bureau
Room W101, West Block, 19 Suffolk Road
Kowloon Tong
Hong Kong

Compilation and Authoring:
Mr. LAU Kwok-kuen
Retired Design and Technology Panel Head

Chinese to English Translation and Typesetting:
PEAK
Member of VTC Group
VTC 機構成員
Vocational Training Council

The copyright of this set of teaching resource materials belongs to the Education Bureau of the Government of the Hong Kong Special Administrative Region.

Schools and educational organisations are welcome to use the content of this set of teaching resource materials for non-profit educational purposes. Teachers can copy, enrich or delete the contents in order to meet the needs of teaching, but in all cases, acknowledgement must be clearly stated.

Otherwise, all rights are reserved, and no part of these materials may be reproduced, or transmitted in any form or by any means without the prior permission of the Education Bureau. © Copyright 2014

Relevant Knowledge

I Technology & Environment

Technological development brings about the rapid development of electronic products in the past few decades and contributes to the huge change in society. Radio and television enable the messages sent by radio and television stations to spread across the world in a short time; fax machines, mobile phones and the Internet enable people all over the world to communicate with each other easily; calculators, computers, smart phones, tablet PCs, etc., greatly enhance the working efficiency. Therefore, the emergence of a new product might have a huge and long-term impact on the society.

1. Technology & life

Technology is affecting our lives. For example: before the emergence of the lifts, few people would like to live in high-rises as the residents need to climb many floors of stairs to return home. Therefore, many cities (including Hong Kong) only constructed buildings of a few storeys. With the advent of the lifts, residents at high levels need only stand for a few seconds, and then the lifts will take them back to the high levels so that many people gradually accepted this change and live in high-rises. Therefore, there are more and more tall buildings among the city constructions and many cities gradually become the concrete jungle.

Modern high rises

Purchasing evolves from the barter at the very beginning to cash purchase in the shops. With the development in technology, more and more people now use electronic money to buy online.

Electronic currency card

With the advances in technology, instead of lining up in the office early in the morning to apply for identification documents, you can now do the booking online, or complete everything on the Internet.

Online booking system of the Hong Kong Immigration Department

2. The effect of technology to environment

a. Environmentally-friendly (Green) design

Many new products not only improve the users' quality of life, but also may change their living habits and health. For example: although cars can broaden the scope of human activities, it has long-term impacts on human beings in the aspects of health and environment. So at time of use, more environmentally friendly methods should be considered as early as possible.

An environmentally friendly electric bus

During the design process, we should consider at the early stage about materials, production, packaging, transportation, sales and even the recycling process. Use more environmentally friendly methods at all stages to handle the possible impacts to the environment.

An environmentally friendly packaging method and material

b. Environmental protection and greening

Human beings have a very close relationship with the environment. Technological and social developments enable people to change the environment, including: construction of roads and bridges, development of shopping centres, improving transportation systems and various public facilities. Technology can be used to improve the environment to make it more suitable for people to live, but can also lead to conflicts. For example, the government has to develop transportation systems to remote areas, the locals may feel that the environment is being damaged and leads to more pollution.

The debate of developing transportation system to the suburbs area

3. The impact of technology on human morality

New technology and new products bring about improvements to the quality of life, but they also bring out some controversial discussions. For examples:

(a) Although cars can broaden the scope of human activities, it also brings serious air pollution and damages the human respiration system;

(b) Although TV can bring information and entertainment to many families, it may reduce the time for communication between family members, affect the reading habits and children's visual development, etc.;

(c) The popularity of smart phones and tablets changes the modes of communication among people. The advantages and disadvantages to humans' long-term impact depend on how people can take advantage of it.

(d) Genetically modified food increases food production and improves the taste of food, but it also brings impact to the existing species, and even the carcinogenic concerns.

(e) The invention and use of the atomic bomb ended a world war with numerous casualties, but it also caused the death, injury and sequela of many people. Its invention and usage is regarded as immoral by many people

(f) The invention of condoms and contraceptives help control the number of people on earth, but they also destroy the bounden duty of humans to continue the family line. Some people consider them contributing to promiscuity.

(g) Abortion is used to remove lives whereas cloned sheep or even cloned human are to create lives. It is uncertain when there will be consensus about this ethical controversy.

Watch the TV too closely will affect visual development

Therefore, when we are in the process of selecting the design or production method, besides considering factors such as the function and cost, we also have to evaluate the impact of design to the environment and life, as well as moral values and other factors.

II Production process

1. Safety and the correct attitude

In order to make the product price remain competitive in the market, cost-effectiveness is one of the important consideration factors. Producers usually incline to choose lower-cost production methods, but the selection also needs to take into account of:

(a) Matching with the selected material (properties, price, environmental protection, etc.)

(b) Classification of the product (necessities, consumer products, etc.)

(c) The product's life cycle or durability

(d) Production volume (quantity)

(e) The required equipment, machinery and skill level of workers

(f) Quality assurance of the products

Producers cannot sacrifice the safety of workers simply because of the costs. Also the workers should not bypass any working process and jeopardize their own or product users' safety due to reasons such as rush job, time saving or earning more money, etc.

Relevant Knowledge

2. Equipment in the production process

Besides one-off or very small amount of production, all manufacturing processes require the use of production equipment with certain features, the following are the production methods and equipment of some common items around us:

Sand casting	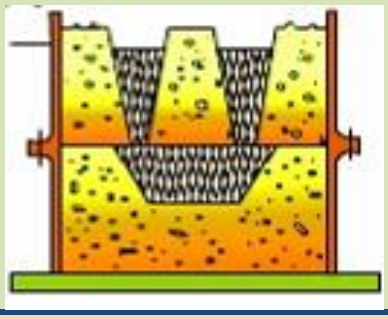	
Plastic injection moulding	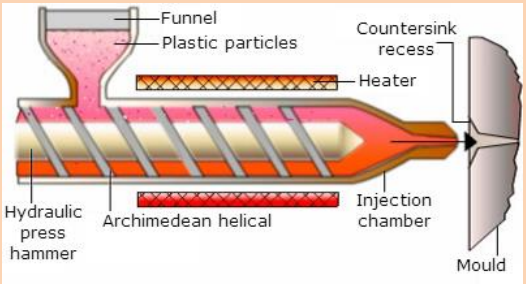	
Vacuum forming and blow moulding		
Bending		
Extrusion, drawing and rolling	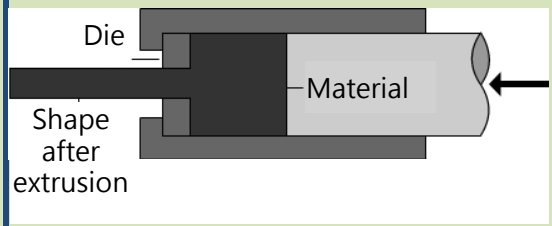	

Relevant Knowledge

Plastic compression moulding		
Laminating and steam bending timber	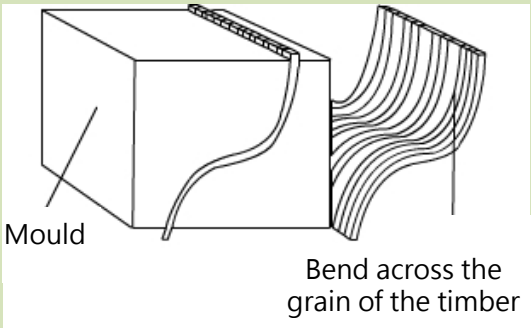	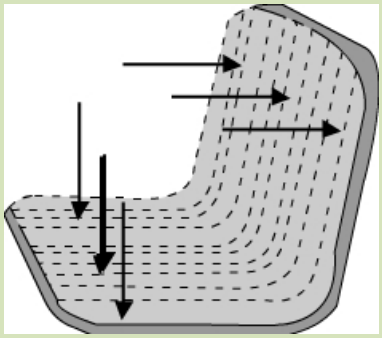

Reflections and discussion

The followings should be considered while analysing the impact of technology, products and production method on the society:

(i) What are the impacts on the environment?

(ii) Whether reusable and replaceable resources are being used?

(iii) How many wastes will be produced? Are these wastes recyclable?

(iv) How much biodegradable material can be used?

(v) How much energy and which kind of energy resources will be used?

(vi) Will the wastes produce toxic gases or harmful substances to the human body?

(vii) Are there any potentially dangerous substances such as radioactive substances, heavy metals, etc.?

(viii) Harmful to existing biological species?

(ix) What will be the consequences if being misused?

(x) What will be the consequences if being used by malicious person?

(xi) What are the impacts to existing human ethics and values?

Lesson Activity

1. With the development of technology, the usage of smart phones seems unavoidable. Divide students into groups of three, discuss and write down the correct attitude in using smart phones.

_____

_____

_____

_____

_____

2. People nowadays not only rely on their feet to walk, the usage of cars seems unavoidable. Divide students into groups of three, discuss and write down how we can reduce the impacts on the environment when using the cars.

_____

_____

_____

_____

_____

3. Divide students into groups of three, select three different types of items at the school and specify their production methods.

Item name	Sketch of the item	Production method

Design Project -Material Processing 2

Robotic pets

Guidelines for project activity

1. Objectives

Students should have basic knowledge about the design process and safe usage of hand tools; they also should have basic understanding about structure and mechanism. The objective of this design project is to apply the above knowledge and use appropriate hand tools to make the product.

2. Introduction to the project

In an affluent society the choice of pets for children increases. In addition to cats and dogs, more people are raising chinchillas, lizards, spiders, etc. and they become good friends of the children. With the development of technology, children toys are more and more mechanised and electronics-based such as new style electronic dogs and electronic cats, and such toys are becoming increasingly interesting.

Electronic dog and cat

The biggest problem in keeping pets is to regularly feed them and clean up their wastes. At the same time, we have to deal with their birth, aging, sickness, death and other issues. There are no such problems for robotic pets, as long as there is regular replacement of energy supply (such as batteries), they will react according to what has been set by the program, and in fact they have their own lovely sides. The future robotic pets will be even closer to the biological features and characteristics of the real ones. Robotic pets are more convenient and easier to operate, and they can bring more fun to humans.

3. Situation

In the 21st century, human beings have entered into the IT Age. Robots are the non-dispensable good helpers in human's future lives. It can help people do many things, such as manufacturing, medical technology, space exploration, hazardous work and entertainment, etc. The production and researching of robots are also rapidly developing. This project is to explore the walking pattern of robotic pets and experience the fun of making your own robotic pets.

4. Design brief

Design and make a motor-driven 4-legged walking robotic pet, and participate in inter-school competition.

5. Time allocation

9 lessons x 40 minutes (total 360 minutes).

6. Required materials

(Buy motor gear box + wood)

No.	Name	Quantity
1	Plywood (9mmx75mmx140mm)	1
2	Plywood (9mmx20mmx75mm)	4
3	Ice lolly sticks (Can use other appropriate materials)	2
4	Round head steel screw #4x9 mm	8
5	Round head steel screw #4x20 mm	2
6	2 × 2A Battery holder with switch (size depends on the physical object)	1
7	Double speed gearbox with crankshaft (for interschool competition, specified model should be chosen)	1

7. Events

(i) The best appearance and design;
(ii) Robotic sprint race competition; or
(iii) Robotic tug of war competition

8. Consideration factors

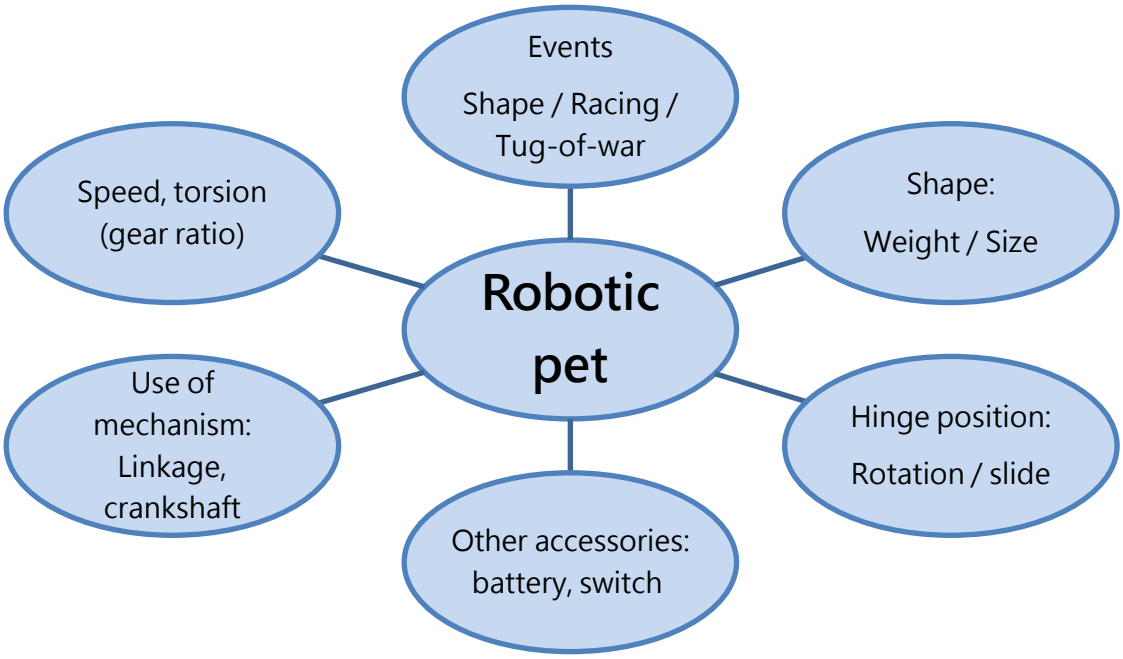

9. Production steps

(i) Assemble the motor gear box.

(ii) Make and assemble the limbs of the robotic pet.

(iii) Mount the gear box and battery box inside the pet.

(iv) Design the shape of the robotic pet.

(v) Produce and assemble the body of the pet.

(vi) Test and modify.

10. Design folio

(Can refer to the design project for book buckle)

Design folio may include the following items to record the design process

(i) Cover

(ii) Table of contents

(iii) Situation

(iv) Design brief

(v) Design specification

(vi) Data collection

(vii) Solution

(viii) Realisation, can use photos to record part of the production process.

(ix) Testing

(x) Evaluation

Design Activity 1

Comparing robotic pets

Robotic pets have now become fashionable gadgets, there are many different types of pets in the market, some can only walk, some can utter and some can simulate the movements of real animals. Try to collect information of three robotic pets in the market or the Internet, and then compare their features and functions. (Instruction: If the pet has one of the following characteristics, put a ✓ to that particular item.)

	( )	( )	( )
Walk forward			
Walk backward			
Turning			
Sound			
Winkling			
Wagging the tail			
Simulating real animal			
Controllable by the player			
Durable			
Reasonable price			
Others ( )			

Reference websites for robotic pets

http://www.solarbotics.net/
http://www.sony-aibo.com/
http://www.androidworld.com/
http://world.honda.com/ASIMO/
http://www.playrobot.com/
http://www.robotadvice.com/sony-qrio_robot.html
http://www.robotics.com/robots.html
https://solarbotics.com/

Reference material 1

Simple mechanism

The walking speed and stability of robotic pets depend on the design of the gear boxes and the four legs, including the gear, linkage, crankshaft, etc. in theory of mechanism. If we want to make a fast speed and stable pet, we must understand these theories of mechanism first.

(a) Gear

Gear can be used as the driving tool for rotational power.

(i) Spur gear

Transmit the rotational power from the rotation shaft to the other parallel axis of rotation.

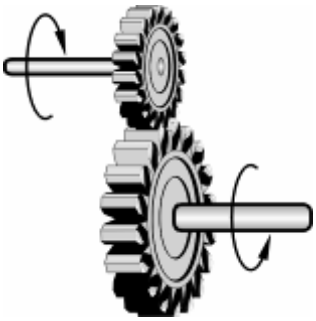

(ii) Worm and worm wheel

Power is transmitted from the worm to the worm wheel, can also transmit power of gear shafts with 90° inter-shaft angle.

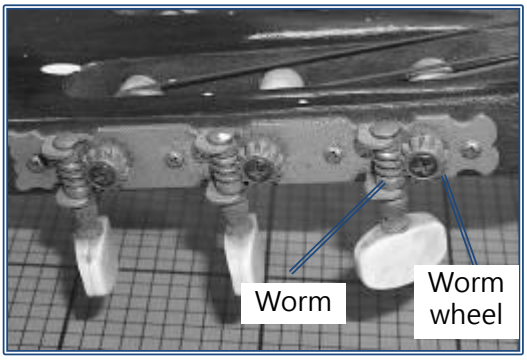

(iii) Gear box

The function of the gear train inside the gear box is to change the direction of force and the rotation speed.

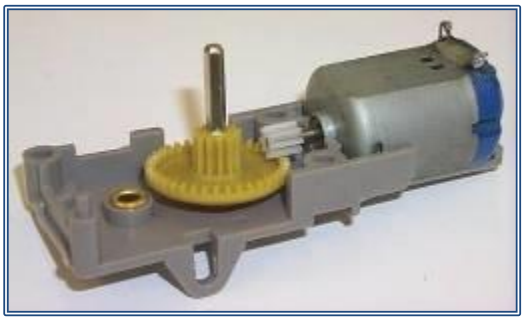

Gear box (cover removed)

Linkage

Linkage structure is the most common type of mechanical combination, which is used to connect the rods together with pivots.

Tool box

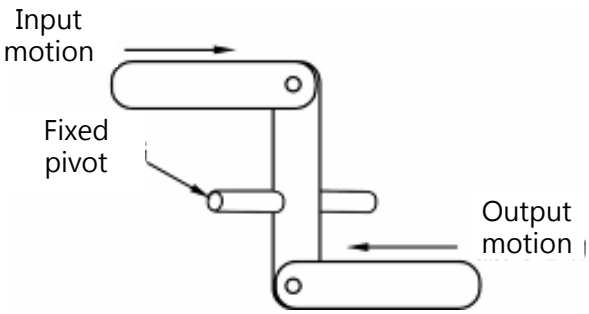

Linkage group

(b) Crankshaft

The crankshaft is a rotational lever system. Its axis and handle is separated by some distance, when the crankshaft is rotated, the force applied on the handle is often smaller than the force exerted by the axis, and will thus have a feeling of effort saving when applying force.

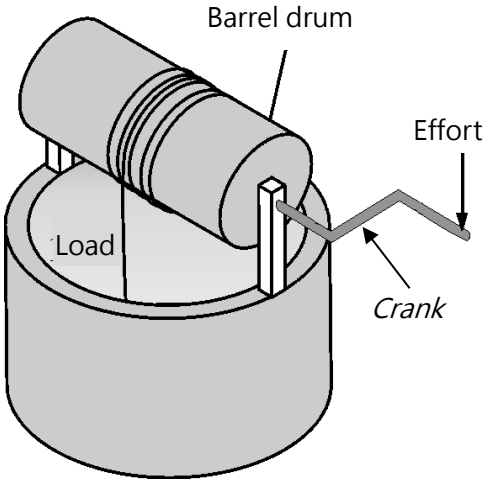

Water well

A train in early days

Design Activity 2

Analyse the mechanisms of robotic pets

From the robotic pets that have been collected in activity 1, select one and analyse the mechanisms used by it.

1. Does this pet use gears and gear boxes? What type or types of gears are used?

_____

_____

_____

2. Does this pet use linkage or crankshaft?

_____

_____

_____

3. Which part of the pet uses linkage or crankshaft? What kind of functions do these mechanisms enable the pet to possess?

_____

_____

_____

4. The gear ratio used by the pet is _____: 1

   The pet uses the _____ leg (counting from centre outwards) for driving the crankshaft

_____

_____

_____

   Distance from the plantar of the pet to the pushing point of the crankshaft is _____ mm

   Time taken by the pet to finish the journey of the race track: _____ seconds

5. If we want to increase the pet's walking speed, how should we use mechanisms such as the gear, gearbox, crankshaft, linkage, etc. to do so?

Gear:_____

_____

GearBox:_____

_____

Crankshaft:_____

_____

Linkage:_____

_____

Reference material 2

Jointing methods

The method for joining materials depends on the function of the components and the conditions. Assembling different parts of the pet requires the use of different jointing methods. For example: gear box needed to be firmly mounted on the baseplate; the legs of the pet needed to be installed with movable engagement, whereas mounting of the body will depend on the designer's needs. The followings are some commonly used jointing methods:

(a) Woodwork screws

Woodwork screws are mainly used for joining wood materials; it is classified according to the screw's head shape, teeth, length and diameter. When joining two pieces of wood together, the choice of length for the woodwork screw should be three times the thickness of the top piece. Firstly, use the **twist drill** to drill the length of the screw and the screw body respectively. Then use the **rose countersink drill** to make countersunk holes for mounting the screw's head portion. At completion of drilling, put together the pieces of wood and use a screwdriver to tighten the screws.

Precaution:
Drilling with the twist drill will generate heat due to friction, careless touching will lead to skin-burning

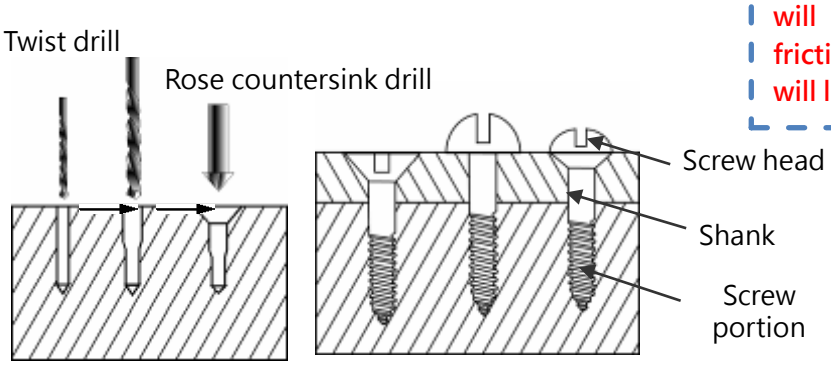

(b) Tools for tightening the screws

The tools to tighten and unscrew the screws have to be compatible with the groove and shape of the screw, which can be grouped into flathead screwdriver, Phillips screwdrivers, hexagonal key and wrench.

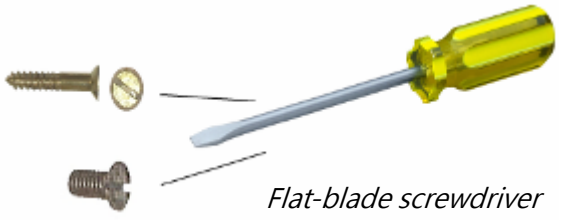

Flat-blade screwdriver

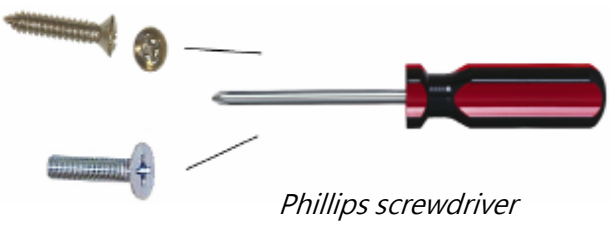

Phillips screwdriver

Socket cap screw and Allen key

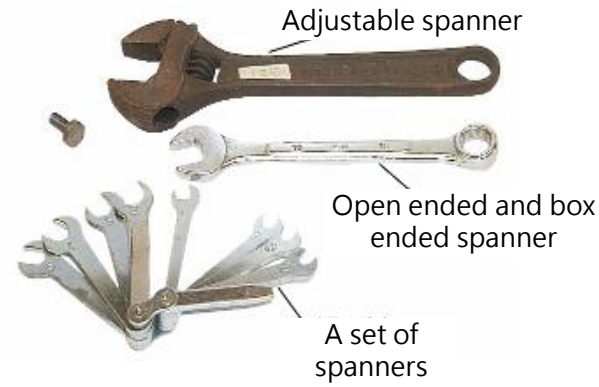

(c) PVA glue

PVA glue is water soluble and commonly used in adhering paper, fabrics, light wood, etc. But its adhering force is not strong and it is not fast drying.

We should tighten the lid after use; PVA glue sticks on the hands can be cleaned with water.

(d) Hot melt glue

Glue gun is a commonly used jointing tool in the workshop. It is composed of the heater, trigger and glue stick. The stick belongs to thermoplastic tape (i.e., it will melt as fluid when heated and solidify into solid when cooled, this physical change can be repeated continuously). When it is pushed into the heater by the handle, it melts and extrudes, as the extrusion's temperature is very high and stickiness is strongest at this moment, the plastic can stick tightly to the object when solidified after cooling.

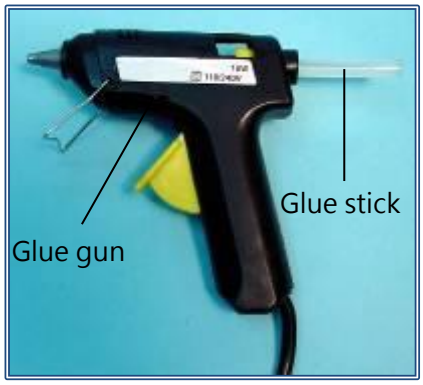

Glue gun

Precaution:
As the extruded plastic and the nozzle of the hot glue gun is very high in temperature, it must be used with caution to avoid getting burned.

Reference material 3

Assembling steps

1. Draw a line at 16mm from the edge on both sides of the baseplate	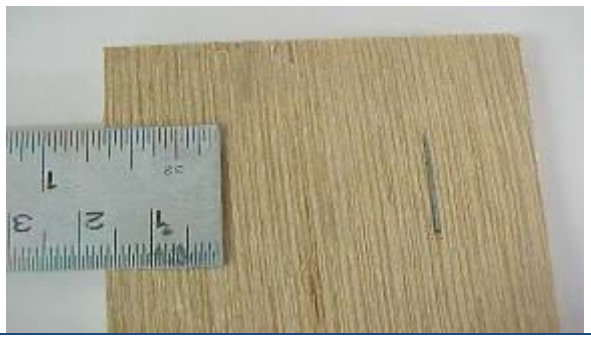
2. Draw a line at 20mm from the top edge	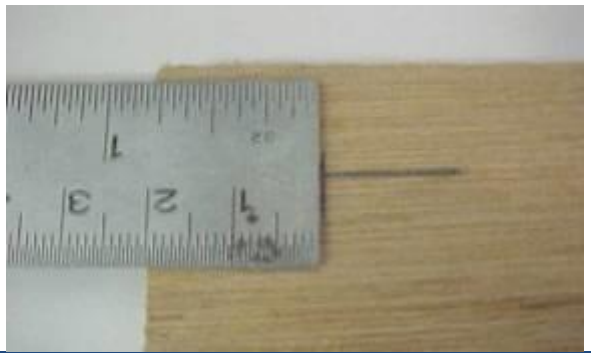
3. Use a centre punch to punch a centre hole (All of the following screws and drill bits require the punching of centre holes)	
4. Draw a line at 120mm from the top edge at the side of the baseplate, find out half of the width	

5. Draw other centre lines and punch the centre holes according to the dimensions	
6. Drilling (The linkage and forefoot should be 3.5mm and the rest 2.5mm)	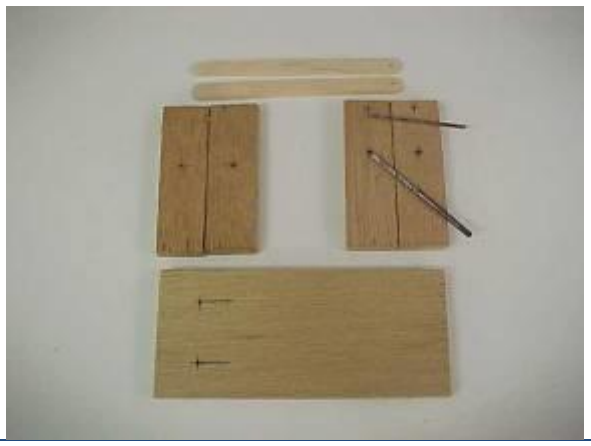
7. Use glue to stick together the linkage with the rear foot (The linkages for the left and right foot need to be in *opposite* directions)	

8. Use 9mm long round head screw to fix the gear box on the baseplate	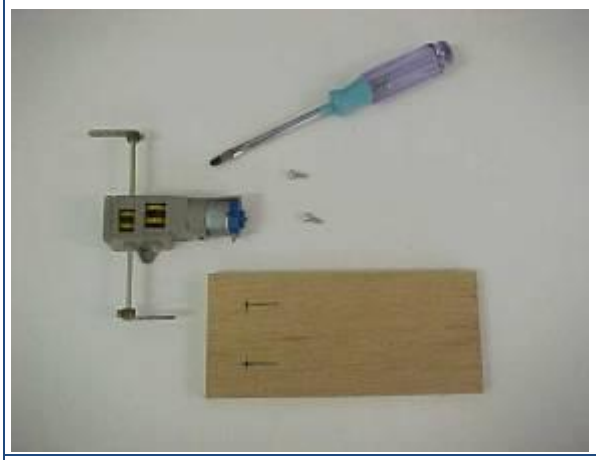
	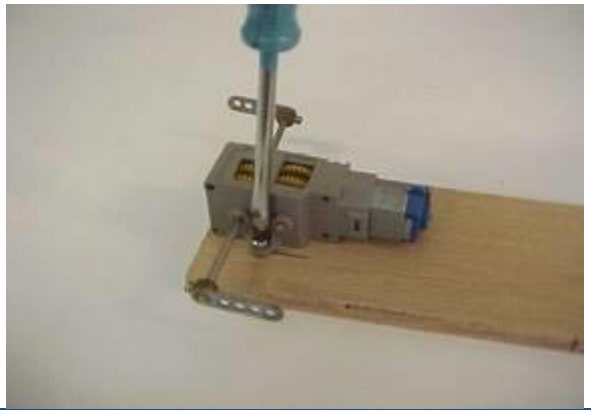
9. Use 4.5mm drill bit to drill holes on the corners of the battery box	
10. Stretch out the switch of the battery box outside the plate; use a pencil to draw lines through the 4.5mm holes of the battery box. Drill holes of 2.5mm after punching the centre holes	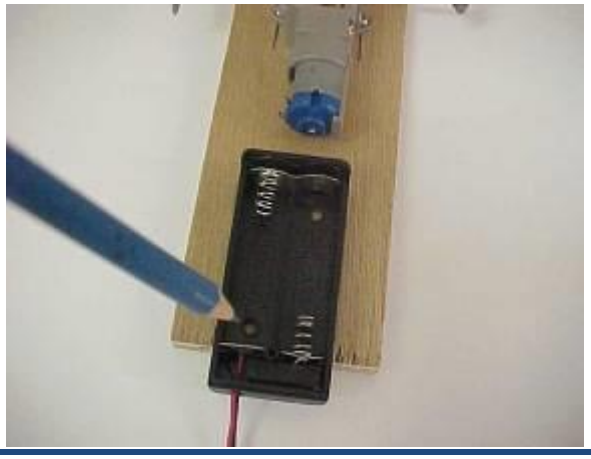

11. Use 9mm long square screw to fix the gear box on the baseplate	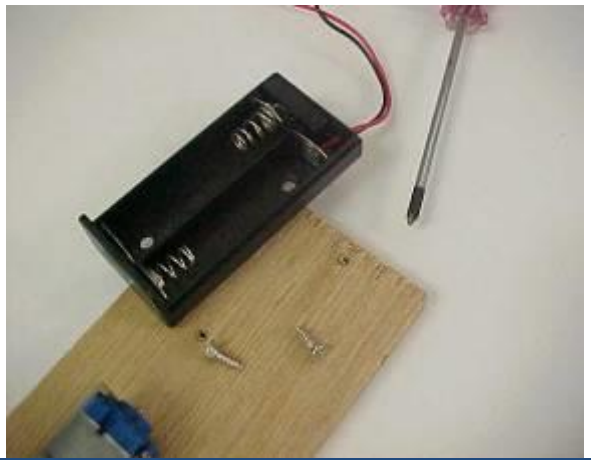
12. Use 9mm long round head screw to fix the crankshaft of the gear box on the centre hole of the rear foot	
13. Use 9mm long round head screw to fix the connection rod on the hole of the forefoot Use 20mm long round head screw to fix the forefoot on the baseplate	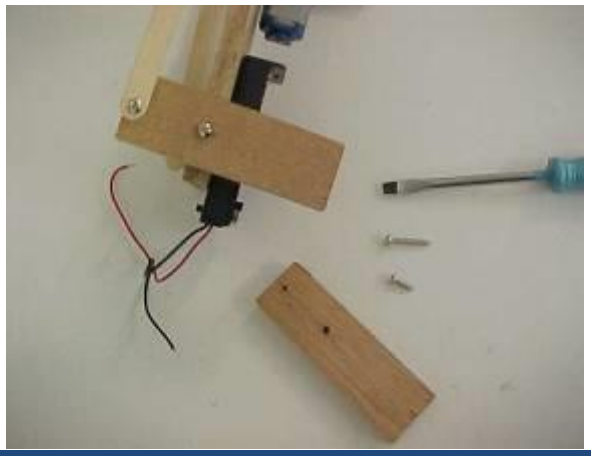

Finished product

Reference material 4

Development

A development is to expand a three-dimensional body and paint it on a flat surface; which is commonly used in product packing, modeling, and sheet metal. Below are some examples of development:

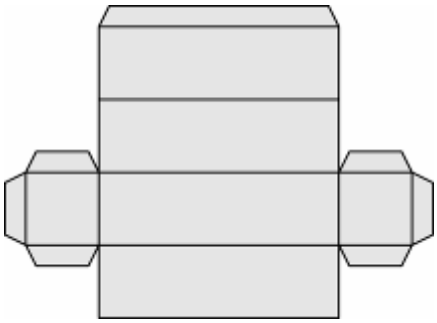

Stretch the paper box as a flat surface

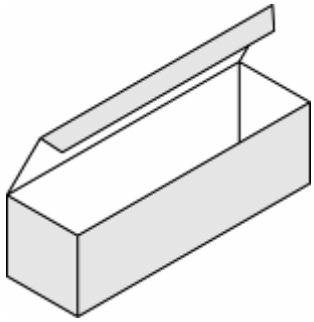

The packing box after folding

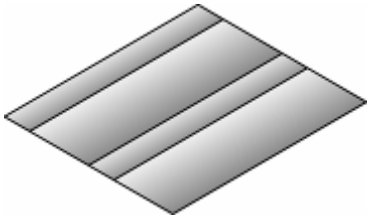

Sheet metal for producing air ducts

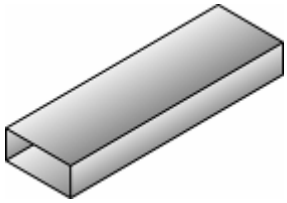

Sheet metal being folded into an air duct

A packing box made of cardboard

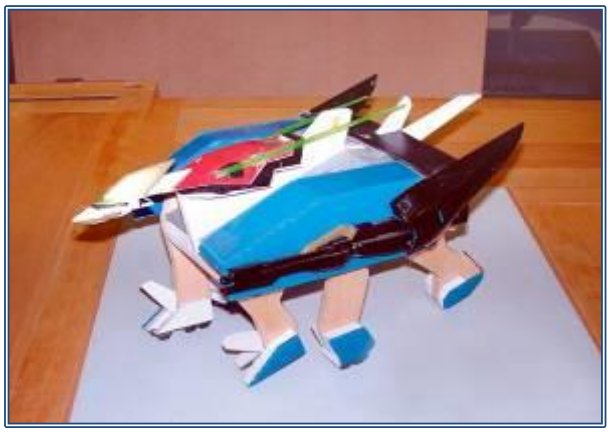

Use cardboard to make the shape of the robotic pet

Design Activity 3

Exercise on drawing development sketch

Draw the development for questions 1 and 2 according to the example.

Example

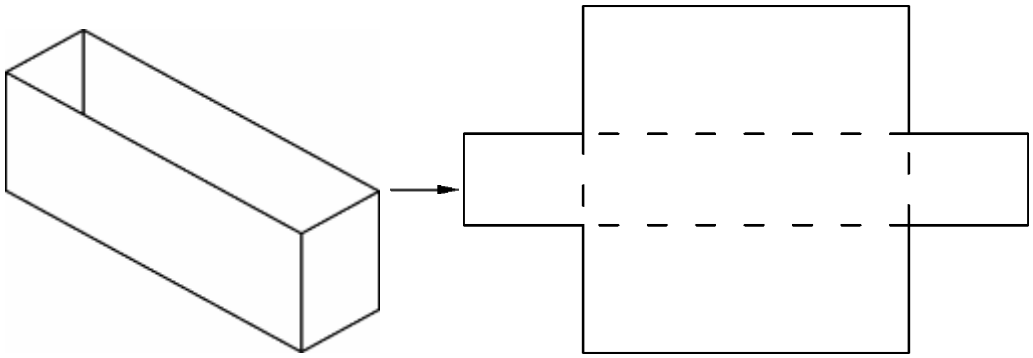

Question 1

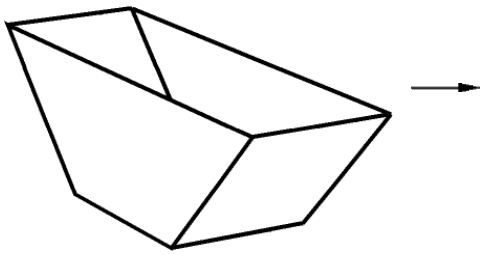

Question 2

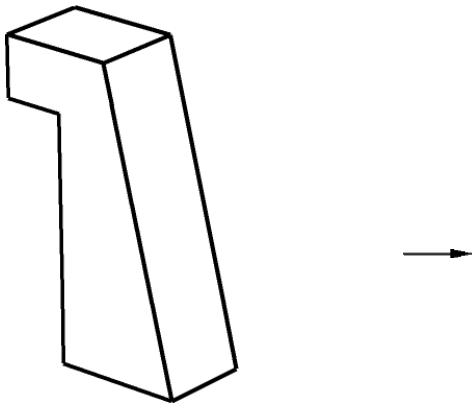

References for the outlook design

Design Activity 4

The outlook of my pet

Source of design inspiration: _____

Major material for the case: _____

Major colour for the case: _____